Seismic Design Manual

Volume III

Building Design Examples:

Steel, Concrete and Cladding

November 2000

Copyright

Publisher

Structural Engineers Association of California (SEAOC)
1730 I Street, Suite 240
Sacramento, California 95814-3017
Telephone: (916) 447-1198; Fax: (916) 443-8065
E-mail: info@seaoc.org; Web address: http://www.seaoc.org/

The Structural Engineers Association of California (SEAOC) is a professional association of four regional member organizations (Central California, Northern California, San Diego, and Southern California). SEAOC represents the structural engineering community in California. This document is published in keeping with SEAOC's stated mission: "to advance the structural engineering profession, to provide the public with structures of dependable performance through the application of state-of-the-art structural engineering principles; to assist the public in obtaining professional structural engineering services; to promote natural hazard mitigation; to provide continuing education and encourage research; to provide structural engineers with the most current information and tools to improve their practice; and to maintain the honor and dignity of the profession."

Editor: Gail Hynes Shea, Albany, California. Cover photos, clockwise from upper right: 900 E. Hamilton Ave. Office Complex, Campbell, Calif.—Joe Maffei, Rutherford & Chekene; Clark Pacific; SCBF connection—Buehler & Buehler; UBC; RBS "Dog Bone" connection—Buehler & Buehler.

Disclaimer

Table of Contents

Preface

This document is the third volume of the three-volume SEAOC *Seismic Design Manual*. The first volume, *Code Application Examples*, was published in April 1999. The second volume, *Building Design Examples: Light Frame, Masonry and Tilt-up* was published in April 2000. These documents have been developed by the Structural Engineers Association of California (SEAOC) with funding provided by SEAOC. Their purpose is to provide guidance on the interpretation and use of the seismic requirements in the 1997 *Uniform Building Code* (UBC), published by the International Conference of Building Officials (ICBO), and in SEAOC's 1999 *Recommended Lateral Force Requirements and Commentary* (also called the Blue Book).

The *Seismic Design Manual* was developed to fill a void that exists between the Commentary of the Blue Book, which explains the basis for the UBC seismic provisions, and everyday structural engineering design practice. While the *Seismic Design Manual* illustrates how the provisions of the code are used, the examples shown do not necessarily illustrate the only appropriate methods of seismic design, and the document is not intended to establish a minimum standard of care. Engineering judgment must be exercised when applying these Design Examples to real projects.

Volume I: Code Application Examples, provides step-by-step examples of how to use individual code provisions, such as how to compute base shear or building period. *Volumes II and III: Design Examples* furnish examples of the seismic design of common types of buildings. In Volumes II and III, important aspects of whole buildings are designed to show, calculation-by-calculation, how the various seismic requirements of the code are implemented in a realistic design.

Volume III contains ten examples. These illustrate the seismic design of the following structures:

1. Three steel braced frames (special, ordinary, and chevron)
2. Eccentric braced frame
3. Two steel moment-resisting frames (special and ordinary)
4. Concrete shear wall
5. Concrete shear wall with coupling beams
6. Concrete special moment-resisting frame
7. Precast concrete cladding

It is SEAOC's present intention to update the *Seismic Design Manual* with each edition of the building code used in California. Work is presently underway on an 2000 International Building Code version.

Ronald P. Gallagher
Project Manager

Acknowledgments

Authors

The *Seismic Design Manual* was written by a group of highly qualified structural engineers. These individuals are California registered civil and structural engineers and SEAOC members. They were selected by a Steering Committee set up by the SEAOC Board of Directors and were chosen for their knowledge and experience with structural engineering practice and seismic design. The Consultants for Volumes I, II and III are:

Ronald P. Gallagher, Project Manager
Robert Clark
David A. Hutchinson
Jon P. Kiland
John W. Lawson
Joseph R. Maffei
Douglas S. Thompson
Theodore C. Zsutty

Volume III was written principally by David A. Hutchinson (Design Examples 1A, 1B and 1C, and 3A and 3B), Jon P. Kiland (Design Examples 2 and 6), Joseph R. Maffei (Design Examples 4 and 5), and Robert Clark (Design Example 7). Many useful ideas and helpful suggestions were offered by the other consultants.

Steering Committee

Overseeing the development of the *Seismic Design Manual* and the work of the Consultants was the Project Steering Committee. The Steering Committee was made up of senior members of SEAOC who are both practicing structural engineers and have been active in Association leadership. Members of the Steering Committee attended meetings and took an active role in shaping and reviewing the document. The Steering Committee consisted of:

John G. Shipp, Chair
Robert N. Chittenden
Stephen K. Harris
Martin W. Johnson
Scott A. Stedman

Reviewers

A number of SEAOC members, and other structural engineers, helped check the examples in Volume III. During its development, drafts of the examples were sent to these individuals. Their help was sought in both review of code interpretations as well as detailed checking of the numerical computations. The assistance of the following individuals is gratefully acknowledged:

Vin Balachandran
Raymond Bligh
Dirk Bondy
David Bonowitz
Robert Chittenden
Michael Cochran
Anthony Court
Juan Carlos Esquival
Brent Forslin
S. K. Ghosh
Jeff Guh
Ronald Hamburger
Douglas Hohbach
Dominic Kelly
Edward Knowles
Kenneth Lutrell
Robert Lyons
Peter Maranian
Harry (Hank) Martin, (AISC)
James O'Donnell
Richard Phillips
Paul Pina
Mehran Pourzanjani
Rafael Sabelli
C. Mark Saunders
David Sheppard
Constantine Shuhaibar

Seismology Committee

Close collaboration with the SEAOC Seismology Committee was maintained during the development of the document. The 1999-2000 Committee reviewed the document and provided many helpful comments and suggestions. Their assistance is gratefully acknowledged.

1999-2000

Martin W. Johnson, Chair
Saif Hussain, Past Chair
David Bonowitz
Robert N. Chittenden
Tom H. Hale
Stephen K. Harris
Douglas C. Hohbach
Y. Henry Huang
Saiful Islam
H. John Khadivi
Jaiteeerth B. Kinhal
Robert Lyons
Simin Naaseh
Chris V. Tokas
Michael Riley, Assistant to the Chair

Suggestions for Improvement

In keeping with two of its Mission Statements: (1) "to advance the structural engineering profession" and (2) "to provide structural engineers with the most current information and tools to improve their practice", SEAOC plans to update this document as seismic requirements change and new research and better understanding of building performance in earthquakes becomes available.

Comments and suggestions for improvements are welcome and should be sent to the following:

Structural Engineers Association of California (SEAOC)
Attention: Executive Director
1730 I Street, Suite 240
Sacramento, California 95814-3017
Telephone: (916) 447-1198; Fax: (916) 443-8065
E-mail: info@seaoc.org; Web address: http://www.seaoc.org

Errata Notification

SEAOC has made a substantial effort to ensure that the information in this document is accurate. In the event that corrections or clarifications are needed, these will be posted on the SEAOC web site at http://www.seaoc.org or on the ICBO website at http://ww.icbo.org. SEAOC, at its sole discretion, may or may not issue written errata.

Seismic Design Manual

Volume III

Building Design Examples:

Steel, Concrete and Cladding

Introduction

Seismic design of new steel and concrete buildings, and precast cladding, for the requirements of the 1997 Uniform Building Code (UBC) is illustrated in this document. Ten examples are shown:

1A Steel special concentric braced frame
1B Steel ordinary concentric braced frame
1C Steel chevron braced frame
2 Eccentric braced frame
3A Steel special moment-resisting frame
3B Steel ordinary moment-resisting frame
4 Concrete shear wall
5 Concrete shear wall with coupling beams
6 Concrete special moment-resisting frame
7 Precast concrete cladding

The buildings selected are for the most part representative of construction types found in Zones 3 and 4, particularly California and the western states. Designs have been largely taken from real world buildings, although some simplifications were necessary for purposes of illustrating significant points and not presenting repetitive or unnecessarily complicated aspects of a design.

The Design Examples are not complete building designs, or even complete seismic designs, but rather they are examples of the significant seismic design aspects of a particular type of building.

In developing these Design Examples, SEAOC has endeavored to illustrate correct use of the *minimum* provisions of the code. The document is intended to help the reader understand and correctly use the design provisions of UBC Chapter 16 (Design Requirements), Chapter 19 (Concrete), and Chapter 22 (Steel). Design practices of an individual structural engineer or office, which may result in a more seismic-resistant design than required by the minimum requirements of UBC, are not given. When appropriate, however, these considerations are discussed as alternatives.

In some examples, the performance characteristics of the structural system are discussed. This typically includes a brief review of the past earthquake behavior and mention of design improvements added to recent codes. SEAOC believes it is essential that structural engineers not only know how to correctly interpret and

apply the provisions of the code, but that they also understand their basis. For this reason, many examples have commentary included on past earthquake performance.

While the *Seismic Design Manual* is based on the 1997 UBC, references are made to the provisions of SEAOC's *1999 Recommended Lateral Force Provisions and Commentary* (Blue Book). When differences between the UBC and Blue Book are significant, these are brought to the attention of the reader.

How to Use This Document

Each Design Example is presented in the following format. First, there is an "Overview" of the example. This is a description of the building and the seismic aspects to be designed. This is followed by an "Outline" indicating the tasks or steps to be illustrated in each example. Next, "Given Information" provides the basic design information, including plans and sketches given as the starting point for the design. This is followed by "Calculations and Discussion," which provides the solution to the example. Some Design Examples have a subsequent section designated "Commentary." The commentary is intended to provide a better understanding of aspects of the example and/or to offer guidance to the reader on use of the information generated. Finally, references and suggested reading are given at the end of the example. Some Design Examples have a section entitled "Factors that Influence Design" that provides remarks on salient design points.

Because the document is based on the UBC, UBC notation is used throughout. However, notation from other codes is also used. In general, reference to UBC sections and formulas is abbreviated. For example, "1997 UBC Section 1630.2.2" is given as §1630.2.2 with 1997 UBC (Volume 2) being understood. "Formula (32-2)" is designated Equation (32-2) or just (32-2) in the right-hand margins of the Design Examples. Similarly, the phrase "Table 16-O" is understood to be 1997 UBC Table 16-O. Throughout the document, reference to specific code provisions, tables, and equations (the UBC calls the latter formulas) is given in the right-hand margin under the heading Code Reference.

When the document makes reference to other codes and standards, this is generally done in abbreviated form. Generally, reference documents are identified in the right-hand margin. Some examples of abbreviated references are shown below.

Right-Hand Margin Notation	More Complete Description
Table 1-A AISC-ASD	Table 1-A of Ninth Edition, American Institute of Steel Construction (AISC) *Manual of Steel Construction, Allowable Stress Design*, 1989.
AISC-Seismic §15.3b	Section 15.3b of the American Institute of Steel Construction, *Seismic Provisions for Structural Steel Buildings*, Chicago, Illinois, 1997.
SEAOC C402.8	Section C402.8 of Commentary of SEAOC *Recommended Lateral Force Requirements and Commentary* (Blue Book), 1999.

Notation

The following notations are used in this document. These are generally consistent with that used in the UBC and other codes such as ACI and AISC. Some additional notations have also been added. The reader is cautioned that the same notation may be used more than once and may carry entirely different meaning in different situations. For example, *E* can mean the tabulated elastic modulus under the AISC definition (steel) or it can mean the earthquake load under §1630.1 of the UBC (loads). When the same notation is used in two or more definitions, each definition is prefaced with a brief description in parentheses (e.g., steel or loads) before the definition is given.

A_B = ground floor area of structure in square feet to include area covered by all overhangs and projections

A_{BM} = cross-sectional area of the base material

A_b = area of anchor, in square inches

A_c = the combined effective area, in square feet, of the shear walls in the first story of the structure

A_{ch} = cross-sectional area of a structural member measured out-to-out of transverse reinforcement

A_{cv} = net area of concrete section bounded by web thickness and length of section in the direction of shear force considered

A_e = the minimum cross-sectional area in any horizontal plane in the first story of a shear wall, in square feet

A_f = flange area

A_g = gross area of section

A_p = the effective area of the projection of an assumed concrete failure surface upon the surface from which the anchor protrudes, in square inches

A_s = area of nonprestressed tension reinforcement

A_{sh}	=	total cross-sectional area of transverse reinforcement (including crossties) within spacing s and perpendicular to dimension h_c
A_{sk}	=	area of skin reinforcement per unit height on one side face
$A_{s,min}$	=	minimum amount of flexural reinforcement
A_{st}	=	area of link stiffener
A_v	=	area of shear reinforcement within a distance s, or area of shear reinforcement perpendicular to flexural tension reinforcement within a distance s for deep flexural members
A_{vd}	=	total area of reinforcement in each group of diagonal bars in a diagonally reinforced coupling beam
A_{vf}	=	area of shear-friction reinforcement
A_w	=	(web) link web area
A_w	=	(weld) effective cross-sectional area of the weld
A_x	=	the torsional amplification factor at Level x
a	=	(concrete) depth of equivalent rectangular stress block
a	=	(concrete spandrel) shear span, distance between concentrated load and face of supports
a_c	=	coefficient defining the relative contribution of concrete strength to wall strength
a_p	=	in-structure component amplification factor, given in §1632 and Table 16-O of UBC
b	=	(concrete) width of compression face of member
b_f	=	flange width
b_w	=	web width
b/t	=	member width-thickness ratio
C_a	=	seismic coefficient, as set forth in Table 16-Q of UBC

C_e = combined height, exposure, and gust factor coefficient as given in Table 16-G of UBC

C_q = pressure coefficient for the structure or portion of structure under consideration as given in Table 16-H

C_t = numerical coefficient as given in §1630.2.2

C_v = seismic coefficient as set forth in Table 16-R

C_m = coefficient defined in Section H1 of AISC-ASD

c = distance from extreme compression fiber to neutral axis

D = dead load on a structural element

D_e = length, in feet, of a shear wall in the first story in the direction parallel to the applied forces

d = effective depth of section (distance from extreme compression fiber to centroid of tension reinforcement)

d_b = (anchor bolt) anchor shank diameter

d_b = (concrete) bar diameter

d_z = column panel zone depth

E = (steel) modulus of elasticity

EI = flexural stiffness of compression member

E, E_h, E_m, E_v, F_i, F_n= (loads) earthquake loads set forth in §1630.1

E_c = modulus of elasticity of concrete, in psi

E_s = (concrete) modulus of elasticity of reinforcement

e = EBF link length

F_a = axial compressive stress that would be permitted if axial force alone existed

F_b = bending stress that would be permitted if bending moment alone existed

F_{BM} = nominal strength of the base material to be welded

F_{EXX}	=	classification number of weld metal (minimum specified strength)
F_p	=	design seismic force on a part of the structure
F_u	=	specified minimum tensile strength, ksi
F_w	=	(steel LRFD) nominal strength of the weld electrode material
F_w	=	(steel ASD) allowable weld stress
F_y	=	specified yield strength of structural steel
F_{yb}	=	F_y of a beam
F_{yc}	=	F_y of a column
F_{ye}	=	expected yield strength of steel to be used
F_{yf}	=	F_y of column flange
F_{yh}	=	(steel) specified minimum yield strength of transverse reinforcement
F_{yw}	=	F_y of the panel-zone steel
f_a	=	computed axial stress
f_b	=	bending stress in frame member
f_c'	=	specified compressive strength of concrete
f_{ct}	=	average splitting tensile strength of lightweight aggregate concrete
f_{ut}	=	minimum specified tensile strength of the anchor
F'_e	=	$\dfrac{12\,\pi^2\,E}{23(K\lambda_b / r_b)^2}$
f_i	=	lateral force at Level *i* for use in Formula (30-10)
f_m'	=	specified compressive strength of masonry
f_p	=	equivalent uniform load

f_r = modulus of rupture of concrete

F_{tt} = through-thickness weld stresses at the beam-column interface

f_y = (concrete) specified yield strength of reinforcing steel

f_x, f_y, f_r = (steel) weld stresses at connection interface

g = acceleration due to gravity

h = overall dimensions of member in direction of action considered

h_c = (concrete) cross-sectional dimension of column core, or shear wall boundary zone, measured center to center of confining reinforcement

h_c = (steel) assumed web depth for stability

h_e = assumed web depth for stability

h_i, h_n,h_x = height in feet above the base to Level *i*, *n*, or *x*, respectively

h_r = height in feet of the roof above the base

h_w = height of entire wall or of the segment of wall considered

I = (loads) importance factor given in Table 16-K

I = (concrete) moment of inertia of section resisting externally applied factored loads

I_{cr} = moment of inertia of cracked section transformed to concrete

I_g = (concrete, neglecting reinforcement) moment of inertia of gross concrete section about centroidal axis, neglecting reinforcement

I_g = (concrete, transformed section) moment of inertia of cracked section transformed to concrete.

I_p = importance factor specified in Table 16-K

I_{se} = moment of inertia of reinforcement about centroidal axis of member cross section

I_t	=	moment of inertia of structural steel shape, pipe or tubing about centroidal axis of composite member cross section
I_w	=	importance factor as set forth in Table 16-K of UBC
K	=	(steel) effective length factor for prismatic member
k	=	effective length factor for compression member
L	=	(loads) live load due to occupancy and moveable equipment, or related internal moments and forces
L	=	(steel) unbraced beam length for determining allowable bending stress
L_p	=	limiting laterally unbraced length for full plastic flexural strength, uniform moment case
l_c	=	(steel RBS) length of radius cut in beam flange for reduced beam section (RBS) design
l_c	=	length of a compression member in a frame, measured from center to center of the joints in the frame
l_h	=	distance from column centerline to centerline of hinge for reduced bending strength (RBS) connection design
l_n	=	clear span measured face to face of supports
l_u	=	unsupported length of compression member
l_w	=	length of entire wall, or of segment of wall considered, in direction of shear force.
Level i	=	level of the structure referred to by the subscript i; $i = 1$ designates the first level above the base
Level n	=	the level that is uppermost in the main portion of the structure
Level x	=	the level that is under design consideration; $x = 1$ designates the first level above the base
M	=	(steel) maximum factored moment
M_c	=	factored moment to be used for design of compression member

M_{cl} = moment at centerline of column

M_{cr} = moment causing flexural cracking at section due to externally applied loads (see §1911.4.2.1)

M_{DL}, M_{LL}, M_{seis} = unfactored moment in frame member

M_f = moment at face of column

M_m = (concrete) modified moment

M_m = (steel) maximum moment that can be resisted by the member in the absence of axial load

M_n = nominal moment strength at section

M_p = (concrete) required plastic moment strength of shearhead cross-section

M_p = (steel) nominal plastic flexural strength, $F_y Z$

M_{pa} = nominal plastic flexural strength modified by axial load

M_{pe} = nominal plastic flexural strength using expected yield strength of steel

M_{pr} = (concrete) probable moment strength determined using a tensile strength in the longitudinal bars of at least 1.25 f_y and a strength reduction factor ϕ of 1.0

M_{pr} = (steel RBS) probable plastic moment at the reduced beam section (RBS)

M_s = (concrete) moment due to loads causing appreciable sway

M_s = (steel) flexural strength; member bending strength at plastic capacity ZF_y

M_u = (concrete) factored moment at section

M_u = (steel) required flexural strength on a member or joint

M_y = moment corresponding to onset of yielding at the extreme fiber from an elastic stress distribution

M_1 = smaller factored end moment on a compression member, positive if member is bent in single curvature, negative if bent in double curvature

M_2 = larger factored end moment on compression member, always positive

N_a = near-source factor used in the determination of C_a in Seismic Zone 4 related to both the proximity of the building or structure to known faults with magnitudes and slip rates as set forth in Tables 16-S and 16-U

N_v = near-source factor used in the determination of C_v in Seismic Zone 4 related to both the proximity of the building or structure to known faults with magnitudes and to slip rates as set forth in Tables 16-T and 16-U

P = (steel) factored axial load

P = (wind) design wind pressure

P_{DL}, P_{LL}, P_{seis} = unfactored axial load in frame member

P_b = nominal axial load strength at balanced strain conditions (see §1910.3.2)

P_{bf} = connection force for design of column continuity plates

P_c = (concrete) critical load

P_c = (concrete anchorage) design tensile strength

P_e = $(23/12)F'_e A$, where F'_e is as defined in Section H1 of AISC-ASD

P_n = nominal axial load strength at given eccentricity, or nominal axial strength of a column

P_o = nominal axial load strength at zero eccentricity

P_{sc} = $1.7\ F_a A$

P_{sc},P_{st} = strength level axial number force for connection design or axial strength check (see §2213.5)

P_{si} = $F_y A$

P_u	=	(concrete) factored axial load, or factored axial load at given eccentricity
P_u	=	(steel) nominal axial strength of a column, or required axial strength on a column or a link
P_u	=	(concrete anchorage) required tensile strength from loads
P_y	=	nominal axial yield strength of a member, which is equal to $F_y A_g$
P_{DL}	=	axial dead load
P_E	=	axial load on member due to earthquake
P_{LL}	=	axial live load
q_s	=	wind stagnation pressure at the standard height of 33 feet, as set forth in Table 16-F
R	=	numerical coefficient representative of the inherent overstrength and global ductility capacity of lateral force resisting systems, as set forth in Table 16-N or 16-P
R_n	=	nominal strength
R_{nw}	=	nominal weld strength
R_p	=	component response modification factor, given in §1632.2 and Table 16-0
R_u	=	required strength
R_y	=	ratio of expected yield strength F_{ye} to the minimum specified yield strength F_y
r	=	(loads) a ratio used in determining ρ (see §1630.1)
r	=	(steel) radius of gyration of cross section of a compression member
r_y	=	radius of gyration about y axis
s	=	spacing of shear or torsion reinforcement in direction parallel to longitudinal reinforcement, or spacing of transverse reinforcement measured along the longitudinal axis

S_A, S_B, S_C, S_D, S_E, S_F = soil profile types as set forth in Table 16-J

S_{RBS} = section modulus at the reduced beam section (RBS)

T = elastic fundamental period of vibration, in seconds, of the structure in the direction under consideration

t_f = thickness of flange

t_w = thickness of web

t_z = column panel zone thickness

U = required strength to resist factored loads or related internal moments and forces

V = the total design lateral force or shear at the base given by Formula (30-5), (30-6), (30-7) or (30-11)

V_c = (concrete) nominal shear strength provided by concrete

V_c = (concrete anchorage) design shear strength

V_{DL}, V_{LL}, V_{seis} = unfactored shear in frame member

V_n = (concrete) nominal shear strength at section

V_n = (steel) nominal shear strength of a member

V_p = (steel) shear strength of an active link

V_{pa} = nominal shear strength of an active link modified by the axial load magnitude

V_s = (concrete) nominal shear strength provided by shear reinforcement

V_s = (steel) shear strength of member, $0.55\ F_y\ dt$

V_u = (concrete anchorage) required shear strength from factored loads

V_u = (concrete) factored shear force at section, including shear magnification factors for overstrength and inelastic dynamic effects

V_u = (loads) factored horizontal shear in a story

V_u	=	(steel) required shear strength on a member
V_u*	=	factored shear force at section, including shear magnification factors for overstrength and inelastic dynamic effects
V_x	=	the design story shear in story x
W	=	(seismic) the total seismic dead load defined in §1620.1.1
W	=	(wind) load due to wind pressure
W_p	=	the weight of an element of component
w_c	=	weights of concrete, in pcf
w_i, w_x	=	that portion of W located at or assigned to Level i or x, respectively
w_{px}	=	the weight of the diaphragm and the element tributary thereto at Level x, including applicable portions of other loads defined in §1630.1.1
w_z	=	column panel zone width
Z	=	(loads) seismic zone factor as given in Table 16-I
Z	=	(steel) plastic section modulus
Z_{RBS}	=	plastic section modulus at the reduced beam section (RBS)
Δ	=	design story drift
Δ_M	=	maximum inelastic response displacement, which is the total drift or total story drift that occurs when the structure is subjected to the design basis ground motion, including estimated elastic and inelastic contributions to the total deformation, as defined in §1630.9
Δ_O	=	relative lateral deflection between the top and bottom of a story due to V_u, computed using a first-order elastic frame analysis and stiffness values satisfying §1910.11.1
Δ_S	=	design level response displacement, which is the total drift or total story drift that occurs when the structure is subjected to the design seismic forces

δ_i	=	horizontal displacement at Level *i* relative to the base due to applied lateral forces, *f*, for use in Formula (30-10)
ϕ	=	(concrete) capacity reduction or strength reduction factor (see §1909.3)
ϕ_b	=	(steel) resistance factor for flexure
ϕ_c	=	(steel) resistance factor for compression
ϕ_v	=	resistance factor for shear strength of panel zone of beam-to-column connections
$\propto$	=	(concrete) angle between the diagonal reinforcement and the longitudinal axis of a diagonally reinforced coupling beam
$\propto, \beta$	=	(steel) centroid locations of gusset connection for braced frame diagonal
$\propto_c$	=	coefficient defining the relative contribution of concrete strength to wall strength
β_c	=	ratio of long side to short side of concentrated load or reaction area
β_1	=	factor defined in §1910.2.7.3
ρ	=	(loads) redundancy/reliability factor given by Formula (30-3)
ρ	=	(concrete) ratio of nonprestressed tension reinforcement (A_s/bd)
ρ_b	=	reinforcement ratio producing balanced strain conditions (see §1910.3.2)
ρ_n	=	ratio of area of distributed reinforcement parallel to the plane of A_{cv} to gross concrete area perpendicular to that reinforcement.
ρ_s	=	ratio of volume of spiral reinforcement to total volume of core (out-to-out of spirals) of a spirally reinforced compression member
ρ_v	=	ratio of area of distributed reinforcement perpendicular to the plane of A_{cv} to gross concrete area A_{cv}
λ	=	lightweight aggregate concrete factor; 1.0 for normal weight concrete, 0.75 for “all lightweight” concrete, and 0.85 for “sand-lightweight” concrete

λ_p	=	limiting slenderness parameter for compact element
l_a	=	length of radius cut in beam flange for reduced beam section (RBS) connection design
l_h	=	distance from column centerline to centerline of hinge for RBS connection design
l_n	=	clear span measured face to face of supports
l_u	=	unsupported length of compression member
l_w	=	length of entire wall or of segment of wall considered in direction of shear force
Ω_o	=	(loads) seismic force amplification factor, which is required to account for structural overstrength and set forth in Table 16-N
Ω_o	=	(steel) horizontal seismic overstrength factor
μ	=	coefficient of friction

References

ACI-318, 1995. American Concrete Institute, *Building Code Regulations for Reinforced Concrete,* Farmington Hills, Michigan.

AISC-ASD, 1989. American Institute of Steel Construction, *Manual of Steel Construction, Allowable Stress Design,* Chicago, Illinois, 9th Edition.

AISC-LRFD, 1994. American Institute of Steel Construction, *Manual of Steel Construction, Load and Resistance Factor Design*, Chicago, Illinois, 2nd Edition.

AISC-Seismic. *Seismic Provisions for Structural Steel Buildings*, American Institute of Steel Construction, Chicago, Illinois, April 15, 1997 and *Supplement No. 1*, February 15, 1999.

SEAOC Blue Book, 1999. *Recommended Lateral Force Requirements and Commentary*, Structural Engineers Association of California, Sacramento, California.

UBC, 1997. International Conference of Building Officials, *Uniform Building Code*, Whittier, California.

Design Example 1A
Special Concentric Braced Frame

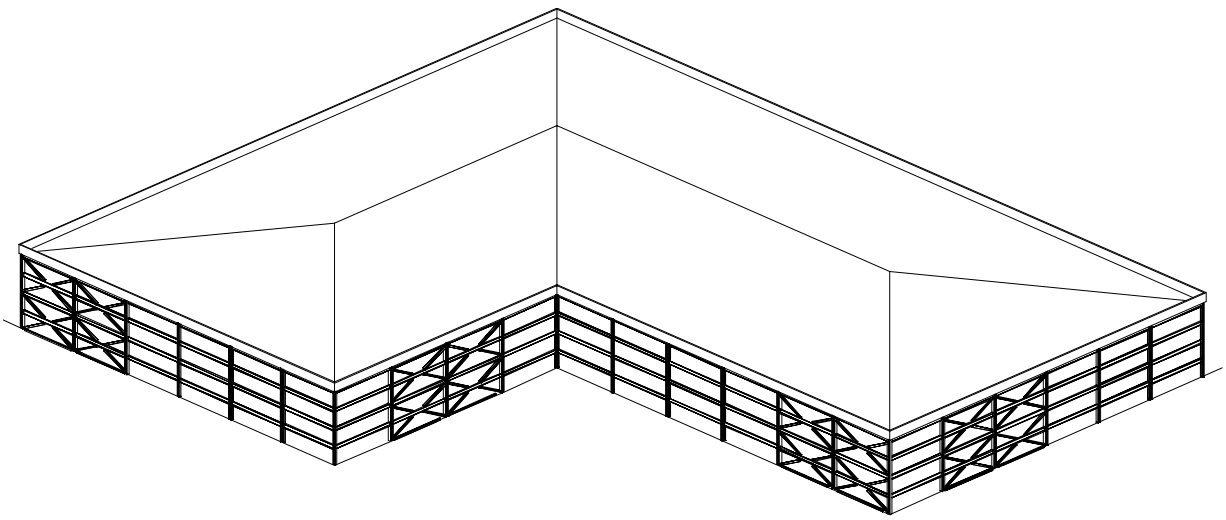

Figure 1A-1. Four-story steel frame office building with special concentric braced frames (SCBF)

Foreword

Design Examples 1A, 1B and 1C show the seismic design of essentially the same four-story steel frame building using three different concentric bracing systems.

- Design Example 1A illustrates a special concentric braced frame (SCBF).
- Design Example 1B illustrates an ordinary concentric braced frame (OCBF).
- Design Example 1C illustrates a chevron braced frame design.

These Design Examples have been selected to aid the reader in understanding design of different types of concentric braced frame systems. Design of eccentric braced frames (EBFs) is illustrated in Design Example 2.

Overview

The 4-story steel frame office structure shown in Figure 1A-1 is to have special concentric bracing as its lateral force resisting system. The typical floor plan is shown on Figure 1A-2, and a building section is shown in Figure 1A-3. Figure 1A-4 depicts a two-story x-brace configuration and elevations. Design of the major lateral force resisting structural steel elements and connections uses AISC Allowable Stress Design (ASD).

The 1997 UBC design provisions for special concentric braced frames (SCBFs) are attributed to research performed at the University of Michigan. The basis for SCBF bracing is the proportioning of members such that the compression diagonals buckle in a well behaved manner, without local buckling or kinking that would result in a permanent plastic deformation of the brace. Research performed has demonstrated that systems with this ductile buckling behavior perform well under cyclic loading. Several references are listed at the end of this Design Example.

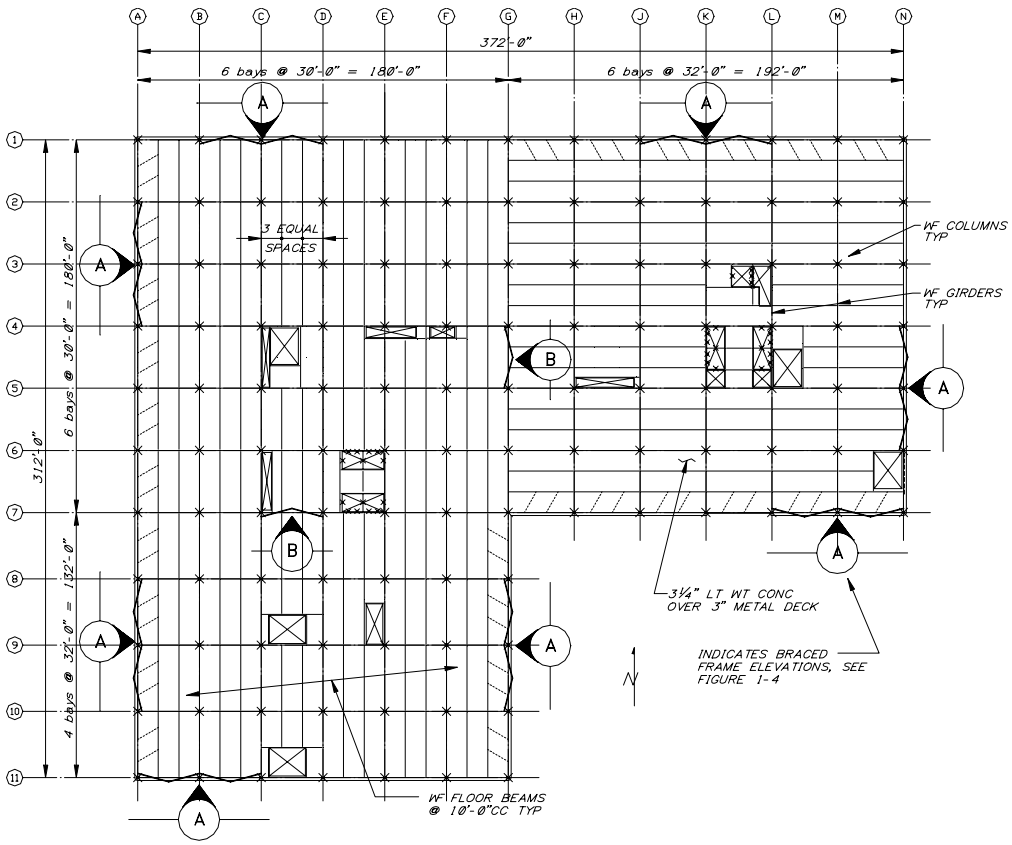

Figure 1A-2. Typical floor framing plan

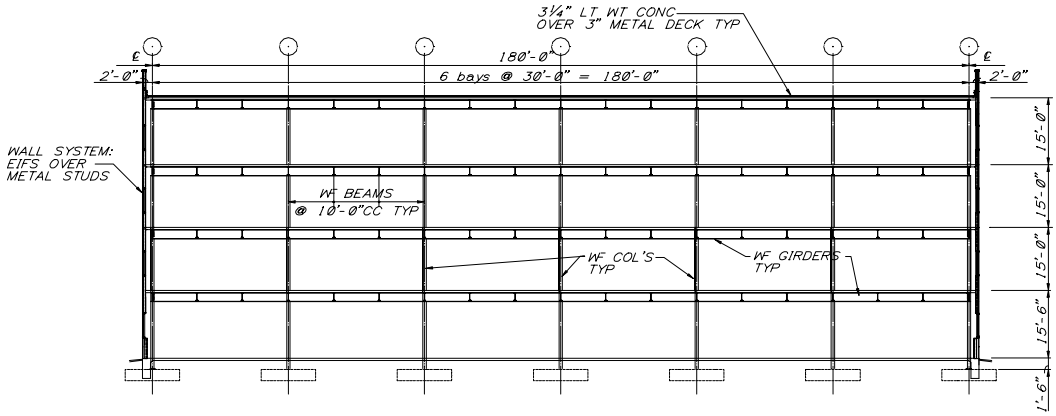

Figure 1A-3. Typical building section

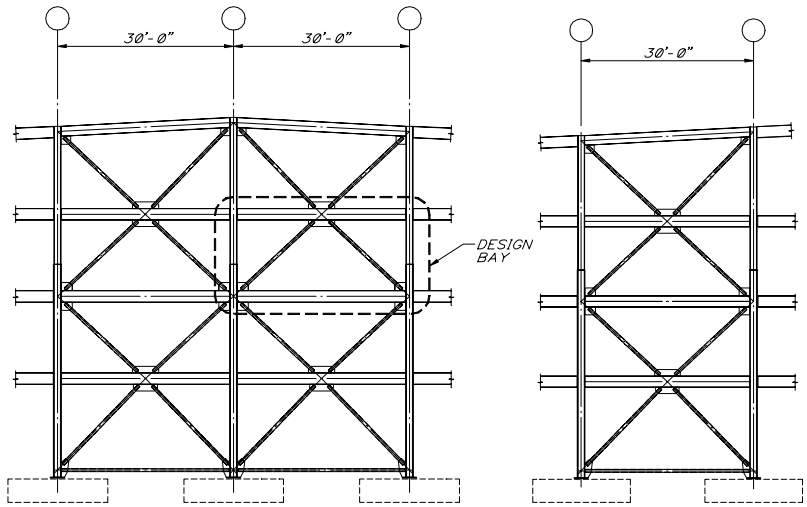

Elevation A Elevation B

Figure 1A-4. Braced frame elevations

Outline

This Design Example illustrates the following parts of the design process:

1. **Design base shear.**
2. **Distribution of lateral forces.**
3. **Interstory drifts.**
4. **Typical diaphragm design.**
5. **Braced frame member design.**
6. **Bracing connection design.**

Given Information

Roof weights:		Floor weights:	
Roofing	4.0 psf	Flooring	1.0 psf
Insulation	3.0	Concrete fill on metal deck	44.0
Concrete fill on metal deck	44.0	Ceiling	3.0
Ceiling	3.0	Mechanical/electrical	5.0
Mechanical/electrical	5.0	Steel framing	9.0
Steel framing	7.0	Partitions	10.0
	66.0 psf		72.0 psf
Live load:	20.0 psf	Live load:	80.0 psf

Exterior wall system weight:
steel studs, gypsum board, metal panels 15 psf

Structural materials:

Wide flange shapes	ASTM A36 (F_y = 36 ksi)
Tube sections	ASTM A500 grade B (F_y = 46 ksi)
Weld electrodes	E70XX
Bolts	ASTM A490 SC
Shear Plates	ASTM A572 grade 50 (F_y = 50 ksi)
Gusset plates	ASTM A36 (F_y = 36 ksi)

Site seismic and geotechnical data:

Occupancy category: Standard Occupancy Structure	§1629.2
Seismic Importance Factor: I=1.0	Table 16-K
Soil Profile Type "Stiff Soil": Type S_D (default profile)	§1629.3, Table 16-J
Seismic zone: Zone 4, $Z = 0.4$	§1629.4.1, Table 16-I
Seismic Zone 4 near-source factors:	
Seismic source type: Type B	§1629.4.2
Distance to seismic source: 8 km	Table 16-U
Near source factors: $N_a = 1.0$, $N_v = 1.08$	Tables 16-S, 16-T

The geotechnical report for the project site should include the seismologic criteria noted above. If no geotechnical report is forthcoming, ICBO has published *Maps of Known Active Fault Near-Source Zones in California and Adjacent Portions of Nevada* [ICBO, 1998]. These maps (prepared by the California Department of Conservation Division of Mines and Geology, in cooperation with the Structural Engineers Association of California) provide a means for easily determining the seismic source type and distance to the seismic source.

Factors that Influence Design

Requirements for design of steel braced frames are given in the 1997 UBC. These cover special concentric braced frames (SCBF), ordinary concentric braced frames (OCBF), and chevron (or V) braced frames. After the adoption of the 1997 UBC provisions by ICBO, the 1997 AISC Seismic Provisions for Structural Steel Buildings (AISC-Seimsic) became available. Although not adopted into the code, these represent the state-of-the-art and are recommended by SEAOC, particularly for design of SCBF connections.

The following paragraphs discuss some important aspects of braced frame design. This discussion is based on SEAONC seminar notes prepared by Michael Cochran, SE.

Permissible types of concentric braced frames.

Shown in Figure 1A-5 are various types of concentric braced frames permitted by the code. Each of these can be design as either an ordinary concentric braced frame (OCBF) or a special concentric braced frame (SCBF). It should be noted that the only difference between an SCBF and an OCBF is the connection detailing and some prescriptive code requirements.

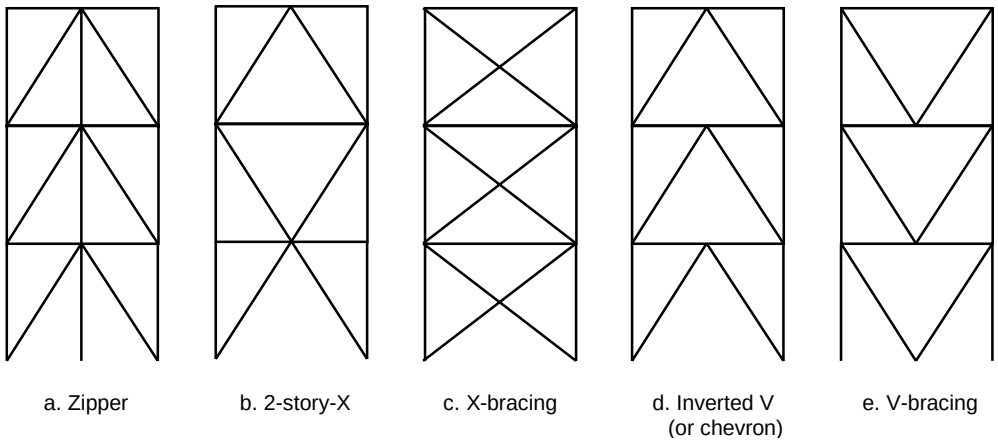

Figure 1A-5. Permissible types of braced frames

All of the frames shown in Figure 1A-5 are essentialy variations on the chevron brace, except for the one-story X-brace (Figure 1A-5c). Single diagonal braced frames are also permissible by the code, but these are heavily penalized since they must take 100 percent of the force in compression unless multiple single diagonal braces are provided along the same brace frame line.

Grades of steel used in SCBFs.

SCBF members are typical wide flange sections (ASTM A36, F_y = 36 ksi, or A572, grade 50, F_y = 50 ksi), tube sections (ASTM A500, grade B, F_y = 46 ksi), or pipes (ASTM A53, grade B, F_y = 35 ksi).

When designing brace connections, the actual yield strength of the steel needs to be considered. The AISC-Seismic provisions address this overstrength issue using the R_y factor, which is not addressed by the UBC or considered in this Design Example. The gusset plate material used in SCBF connections should be of equal yield strength to the brace member. Since the actual expected yield strength of most structural sections used as brace members is in excess of 50 ksi, the strength of the gusset plate material should be at least 50 ksi. High strength steel is required in order to keep the gusset plate thickness and dimensions to a minimum. Use of A36 material (as shown in this Design Example) will generally result in larger connections.

Brace behavior.

Concentric braced frames are classified by the UBC as either ordinary or special. The title “special” is given to braced frames meeting certain detailing and design parameters that enable them to respond to seismic forces with greater ductility. The Blue Book Commentary is an excellent reference for comparison and discussion of these two systems.

Both inverted V-frames and V-frames have shown poor performance during past earthquakes due to buckling of the brace and flexure of the beam at the midspan connection instead of truss action, therefore the zipper, 2-story-X and X-bracing schemes are the preferred configurations.

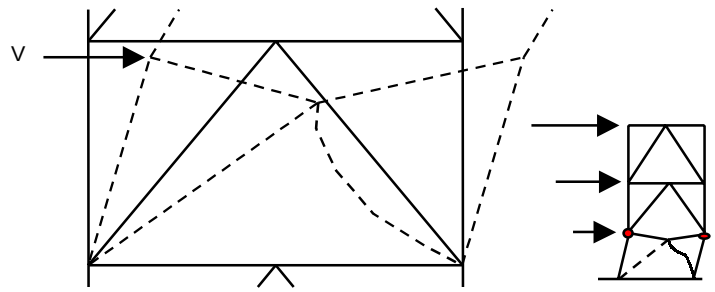

Figure 1A-6. Chevron brace post-buckling stage and potential hinging of columns

The SEAOC Blue Book (in Section C704) has gone as far to recommend that chevron bracing should not be used unless it is in the Zipper or 2 story x configuration in high seismic zones. The reader is referred to the SEAOC Blue Book for a further discussion on chevron braces.

Generally, the preferred behavior of bracing is in-plane buckling when fixity is developed at the end connections and three hinges are required to form prior to failure of the brace. The problem is that it is difficult to develop this type of fixity when you are using gusset plate connections which tend to lend themselves to out-of-plane buckling of the brace and behave more like a pin connection.

There are limited structural shapes availble that can be oriented such that the brace will buckle in-plane. The following is a list of such shapes:

1. Hollow structural sections about their weak axis, for example, a TS 6x3x1/2 arranged as shown in Figure 1A-7a (**Note:** there can be a problem with shear lag in HSS sections).

2. Double angles with short legs back to back (Figure 1A-7b).

3. Wide flange shapes buckling about their weak axis (Figure 1A-7c).

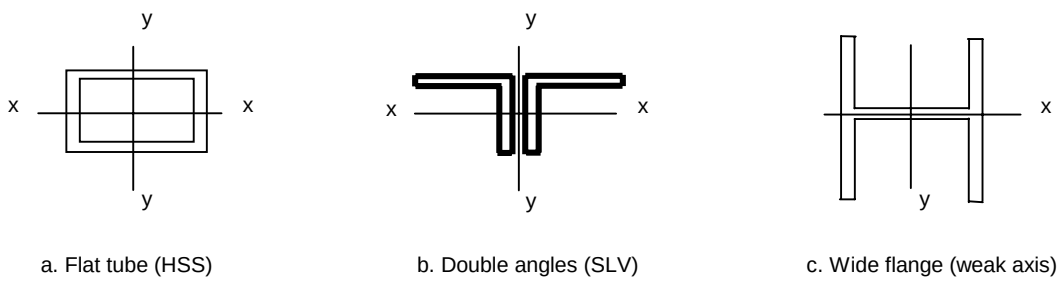

Figure 1A-7. Various brace shapes oriented for in-plane buckling

When designing a brace to buckle in-plane, it is recommended that the ratio of r_x/r_y not exceed 0.65 to ensure that the brace will buckle in-plane.

Two architectural restrictions typically occur that inhibit in-plane buckling. First, the architect may not want to reduce the floor space by putting the brace in the flat position, and second, often there are infill steel studs above and below the brace, which may prevent the brace from buckling in-plane and force it to buckle out-of-plane.

Both AISC and UBC steel provisions provide an exception that when met, allow for the brace to buckle out-of-plane. With the predominate use of gusset plates, this exception is probably used 95 percent of the time in brace design. The brace connection using a vertical gusset plate has a tendancy to buckle out-of-plane due to the lack of stiffness in this direction.

As can be seen in the Figure 1A-8, the gusset plate has significantly less stiffness in the out-of-plane direction. If the brace is symmetrical, you have a 50-50 chance as to whether it will buckle in-plane or out-of-plane, and the end connections then have a great influence as to how the brace will actually buckle. Since there is significantly less stiffness in the out-of-plane direction, the brace will buckle out-of-plane.

When a brace buckles out-of-plane relative to the gusset plate, it attempts to form a hinge line in the gusset plate. In order for the brace to rotate and yield about this hinge line (act as a pin connection), the yield lines at each end of the brace must be parallel. This is illustrated in Figure 1A-9 and Figure 1A-10.

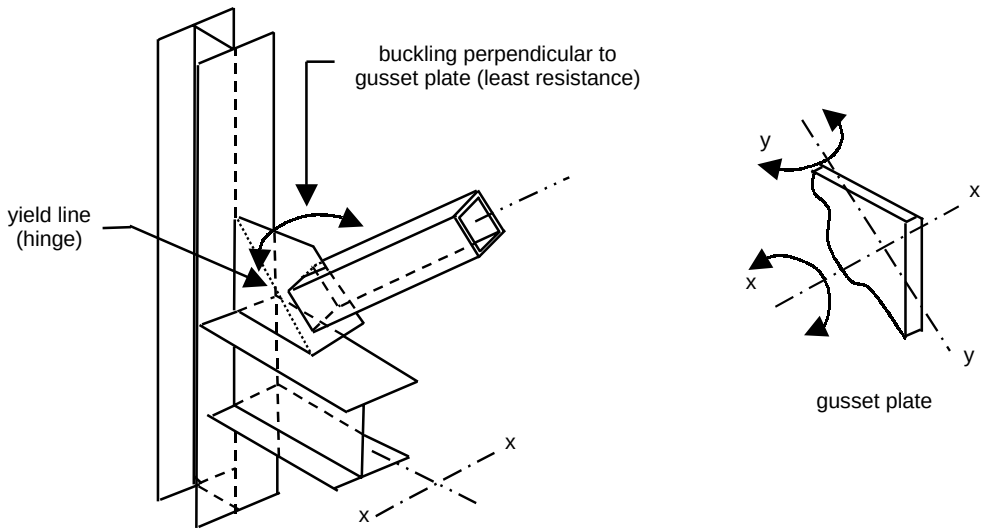

Figure 1A-8. In-plane vs out-of-plane buckling of braces; gusset plate stiffness can influence brace buckling direction

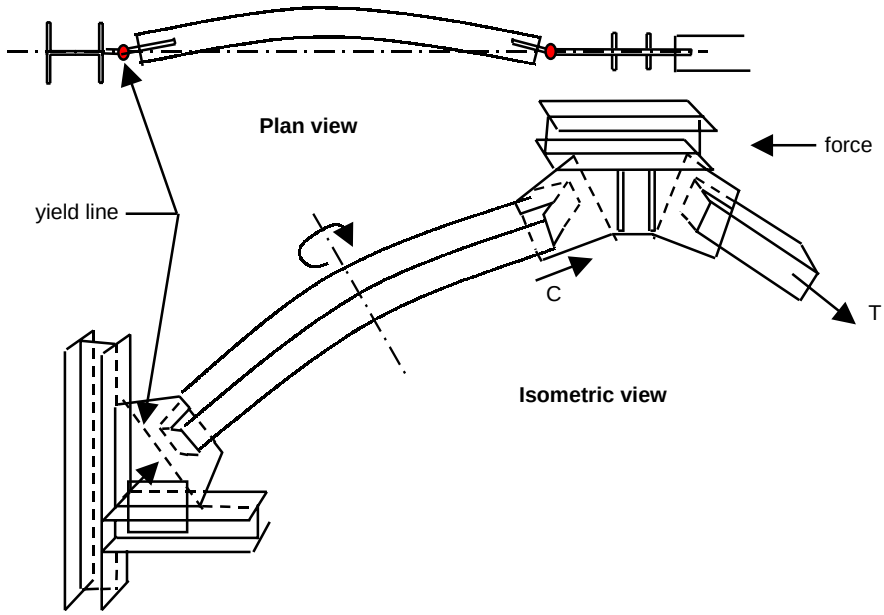

Figure 1A-9. Out-of-plane buckling of the brace; gusset plates resist axial loads without buckling, but can rotate about the yield line to accommodate the brace buckling

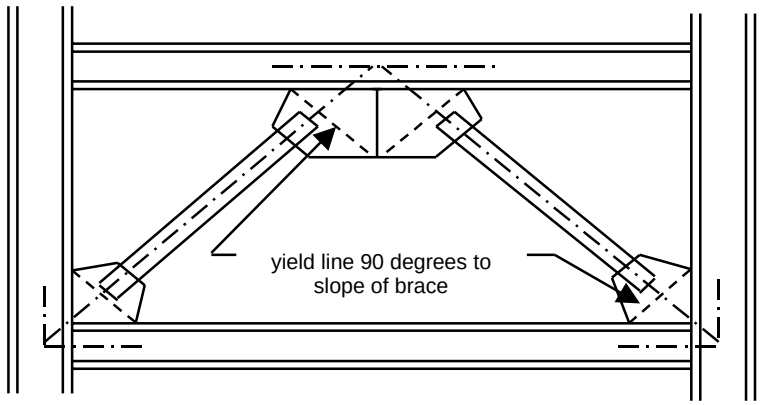

Figure 1A-10. Yield line in gusset plate must be perpendicular to the brace axis

To ensure that rotation can occur at each end of the brace without creating restraint, the axis of the yield line must be perpendicular to the axis of the brace.

Another requirement to allow for rotation about the yield line to occur, is a minimum offset from the end of the brace to the yield line, as shown in Figure 1A-11. If this distance is too short, there physically is insufficent distance to accomodate yielding of the gusset plate without fracture. Figure 1A-11 depicts the minimum offset requirement of the building codes. Due to erection tolerances and other variables, it is recommended that this design offset not be less than three times the gusset plate thickness (3*t*).

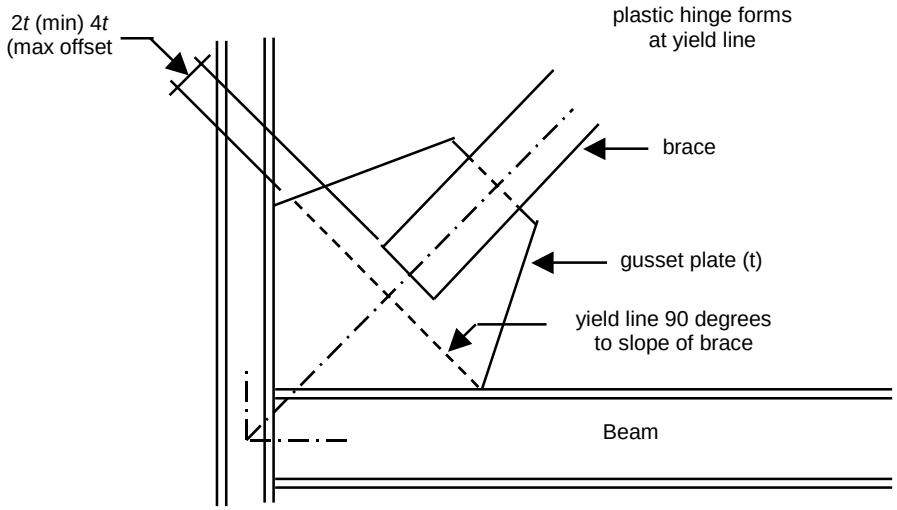

Figure 1A-11. Yield line offset requirements; in practice 3t is often used to allow for erection tolerances

There has been a misconception in some previous interpetations of the yield line offset, that all that was necessary was shape the end of the brace relative to the yield line so that they both were parallel to each other. Inherently, what happens is that the yield lines at the opposite ends of the brace are not parallel (see Figure 1A-10 for parallel yield line illustration) to each other and restraint builds up in the gusset plate as it attempts to buckle out-of-plane. The only way to relieve the stress is for the gusset plate to tear at one end of the brace, until the yield lines at each end of the brace are again parallel to each other.

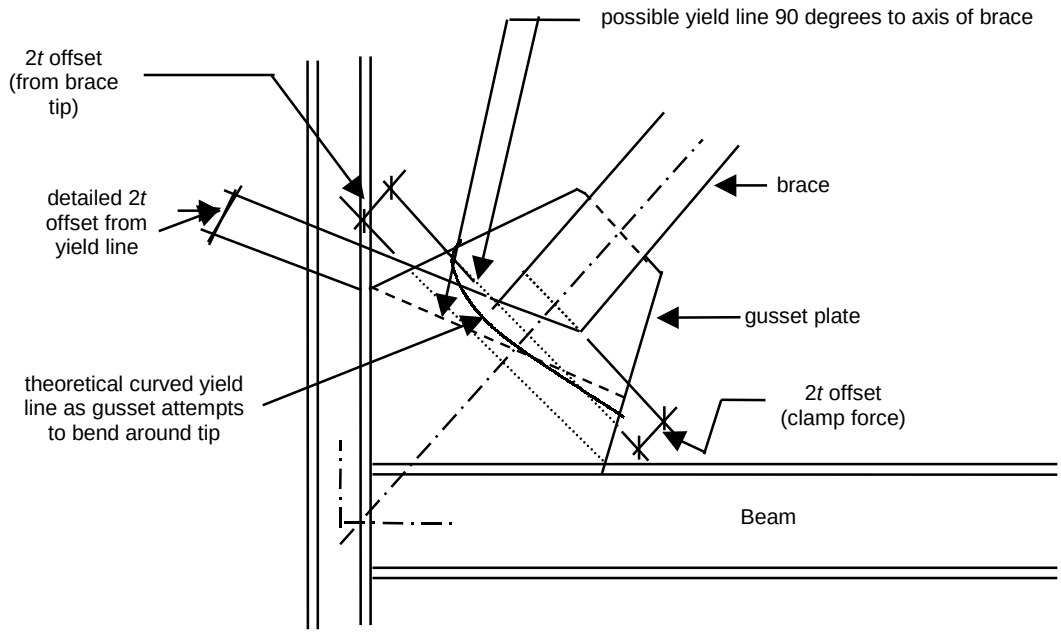

***Note*: This detail is *not* recommended.**

Figure 1A-12. Shaping end of brace creates restraint

Figure 1A-12 (not recommended) depicts what happens when you try to shape the end of the brace to match the yield line slope. Due to the offset in the end of the brace, the yield line will attempt to bend around corner of the brace. This creates several problems, in that it is impossible to bend the plate about a longer curved line, since the curve creates more stiffness than a shorter straight line between two points that wants to be the hinge. The end tip of the brace along the upper edge is generally not stiff enough to cause a straight yield line to bend perpendicular to the brace axis about the tip end of the brace since there is only one side wall at this location to apply force to the gusset plate.

Detailing considerations.

Floor slabs, typically metal deck and concrete topping slab in steel frame buildings, can cause additional restraint to buckling out-of-plane and must be taken into account during design.

If the yield line crosses the edge of the gusset plate below the concrete surface, more restraint occurs, the gusset plate will likely tear along the top of the concrete surface.

The SCBF connections design details in Design Example 1A have been simplified, but need to consider the potential restraint that occurs due to the floor deck since it will impact the gusset plate design. To keep the gusset plate size as small as possible, the gusset plate should be isolated from the concrete slab so the yield line can extend below the concrete surface. Figure 1A-13 shows how the gusset plate could be isolated from restraint caused by the slab. Note that the entire gusset plate does not have to be isolated, just that area where the yield line occurs. The compressible material which can be used would be a fire caulk that has the same required fire rating as the floor system.

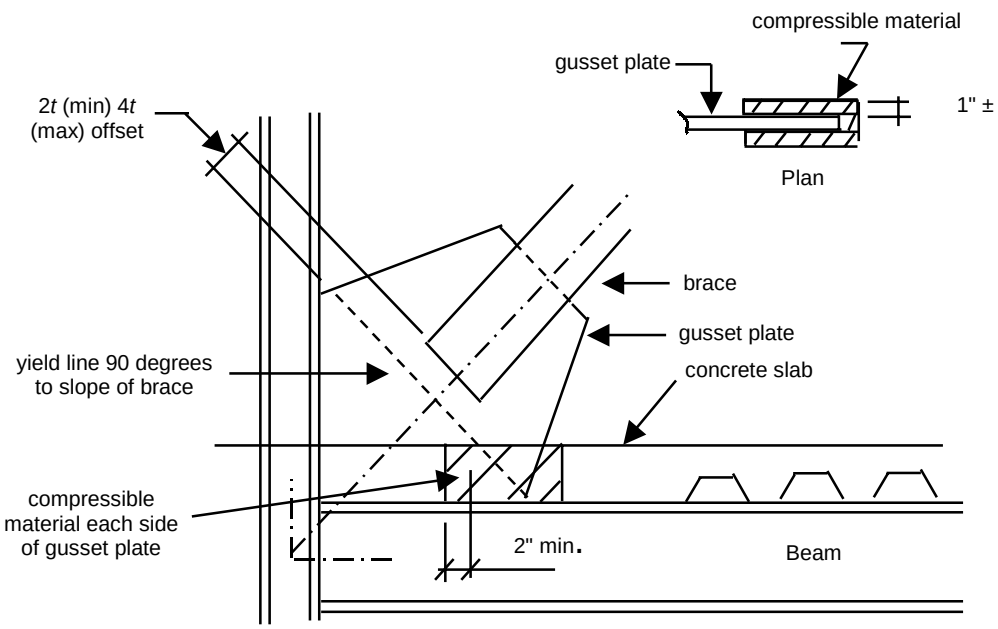

Figure 1A-13. For the yield line to develop in the gusset plate, the gusset plate must be isolated from the slab

A recent development in the design of gusset plate connections is the need to consider the length of the unstiffened edge of the gusset plate and the possibility of a premature buckling. For additional information about this subject, as well as additonal gusset plate design and sizing criteria such as the "Critical Angle Concept" and other practical design information, the reader is referred to the recent SEAONC (May, 2000) and SEAOSC (November, 1999) seminar notes on the design and detailing of SCBF steel connections.

Field inspection of SCBFs.

Because of the critical importance of the connections, the actual field erection of SCBFs must be carefully inspected. Shop drawings often show erection aids such as clip angles and erection bolts. These are used to properly center the brace on the gusset plate. In the case of tube bracing, it is very common to have an erection bolt hole placed at each end of the brace. Occasionally, erector crews ignore these erection aids while placing the bracing over the gusset plates and making the weldments without verifying that the required 2*t* to 4*t* offset from the yield line has been maintained.

The design engineer needs to remember that structural steel is erected using the shop drawings and that the structural drawings are often not checked, even though it is common practice to provide some form of general note that states "shop drawings are an erection aid, and structural drawings shall take precedent over the shop drawings…".

The following is a list of items that should be included in the checklist given to the Special Inspector:

1. Verify that the 2*t* minimum, 4*t* maximum offset from the yield line to brace end is maintained at each end of the brace.

2. Verify that the 1-inch minimum offset from the brace to the edge of the gusset plate is maintained and that the gusset plate edge slopes are the same slopes as shown on shop drawings and structural drawings.

3. Verify that the gusset plate yield line has been isolated from the concrete slab and that is is away from an edge stiffener plates.

Calculations and Discussion	Code Reference

1. Design base shear. **§1630.1**

1a. Check configuration requirements. **§1629.5, Table 16-L**

The structure is L-shaped in plan and must be checked for vertical and horizontal irregularities.

Vertical irregularities. Review Table 16-L.

By observation, the structure has no vertical irregularities; the bracing is consistent in all stories with no discontinuities or offsets, and the mass is similar at all floor levels.

Plan irregularities. Review Table 16-M. §1633.2.9, Table 16-M, Items 6 & 7

The building plan has a re-entrant corner with both projections exceeding 15 percent of the plan dimension, and therefore is designated as having Plan Irregularity Type 2. Given the shape of the floor plan, the structure is likely to have Torsional Irregularity Type 1. This condition will be investigated with the computer model used for structural analysis later in this Design Example.

Plan Irregularity Type 2 triggers special consideration for diaphragm and collector design, as delineated in §1633.2.9, Items 6 and 7.

1b. Classify structural system and determine seismic factors. **§1629.6**

The structure is a building frame system with lateral resistance provided by special concentrically braced frames (SCBFs) (System Type 2.5.a per Table 16-N). The seismic factors are:

$R = 6.4$

$\Omega_o = 2.2$

$h_{max} = 240\,\text{ft}$ §1630.3, Table 16-N

1c. **Select lateral force procedure.** **§1629.8**

The static lateral force procedure is permitted for irregular structures not more than five stories or 65 feet in height (§1629.8.3). Although the structure has a plan irregularity, it is less than 65 feet in height. A dynamic analysis is not required, so static lateral procedures will be used.

1d. **Determine seismic response coefficients C_a and C_v.** **§1629.4.3**

For Zone 4 and Soil Profile Type S_D:

$$C_a = 0.44(N_a) = 0.44(1.0) = \underline{\underline{0.44}}$$ Table 16-Q

$$C_v = 0.64(N_v) = 0.64(1.08) = \underline{\underline{0.69}}$$ Table 16-R

1e. **Evaluate structure period T.** **§1630.2.2**

Per Method A:

$$T_A = C_t(h_n)^{3/4} C_t = 0.020$$ (30-8)

$$T_A = 0.02(62)^{3/4} = 0.44\,\text{sec}$$

Per Method B:

From three-dimensional computer model, the periods are:

North-south direction:

$$T_B = 0.66\,\text{sec}$$

East-west direction:

$$T_B = 0.66\,\text{sec}$$

Maximum value for $T_B = 1.3\,T_A = 1.3(0.44) = 0.57\,\text{sec}$

Therefore, upper bound on period governs use $T = \underline{\underline{0.57\,\text{sec}}}$ §1630.2.2

1f. Determine design base shear.

The total design base shear for a given direction is determined from Equation (30-4). Since the period is the same for both directions, the design base shear for either direction is:

$$V = \frac{C_v I}{RT} W = \frac{0.69(1.0)}{6.4(0.57)} W = 0.189W \tag{30-4}$$

Base shear need not exceed:

$$V = \frac{2.5 C_a I}{R} W = \frac{2.5(0.44)(1.0)}{6.4} = 0.172W \tag{30-5}$$

For Zone 4, base shear shall not be less than:

$$V = \frac{0.8 Z N_v I}{R} W = \frac{0.8(0.4)(1.08)(1.0)}{6.4} = 0.054W \tag{30-7}$$

Equation (30-5) governs base shear.

$$\therefore V = \underline{\underline{0.172W}}$$

1g. Determine earthquake load combinations. §1630.1

Section 1630.1.1 specifies earthquake loads. These are E and E_m as set forth in Equations (30-1) and (30-2).

$$E = \rho E_H + E_v \tag{30-1}$$

$$E_m = \Omega_o E_H \tag{30-2}$$

The normal earthquake design load is E. The load E_m is the estimated maximum earthquake force that can be developed in the structure. It is used only when specifically required, as will be shown later in this Design Example.

Before determining the earthquake forces for design, the reliability/redundancy factor must be determined.

Reliability/redundancy factor $\rho = 2 - \dfrac{20}{r_{\max}\sqrt{A_b}}$ (30-3)

$$A_b = (180)^2 + 180(132 + 192) = 90{,}720\,\text{ft}^2$$

To estimate an initial value for ρ, for purposes of preliminary design, an assumption for the value of r_{max} is made. For r_{max}, assume that the highest force in any brace member is 10 percent greater than average for the 18 total braces.

$$\therefore\ r_{\max} = \frac{1.10}{18} = 0.061 \qquad \text{§1630.1.1}$$

and:

$$\rho = 2 - \frac{20}{0.061(90{,}720)^{1/2}} = 0.91$$

and:

$$1.0 \le \rho \le 1.5$$

$$\therefore \text{ Use } \rho = 1.0$$

The value for ρ should be confirmed upon completion of the computer analysis for the brace forces.

For load combinations of §1612, E and E_m are as follows:

$$E = \rho E_h + E_v = 1.0(V) \qquad (30\text{-}1)$$

($E_v = 0$ since allowable stress design is used in this Design Example)

$$E_m = \Omega_o E_h = 2.2(V) \qquad (30\text{-}2)$$

Note that seismic forces may be assumed to act non-concurrently in each principal direction of the structure, except as per §1633.1.

2. Distribution of lateral forces.

2a. Calculate building weights and mass distribution.

Calculated building weights and centers of gravity at each level are given in Table 1A-1. Included is an additional 450 kips (5.0 psf) at the roof level for mechanical equipment. Building mass properties are summarized in Table 1A-2. Braced frame locations are noted in Figure 1A-14 below.

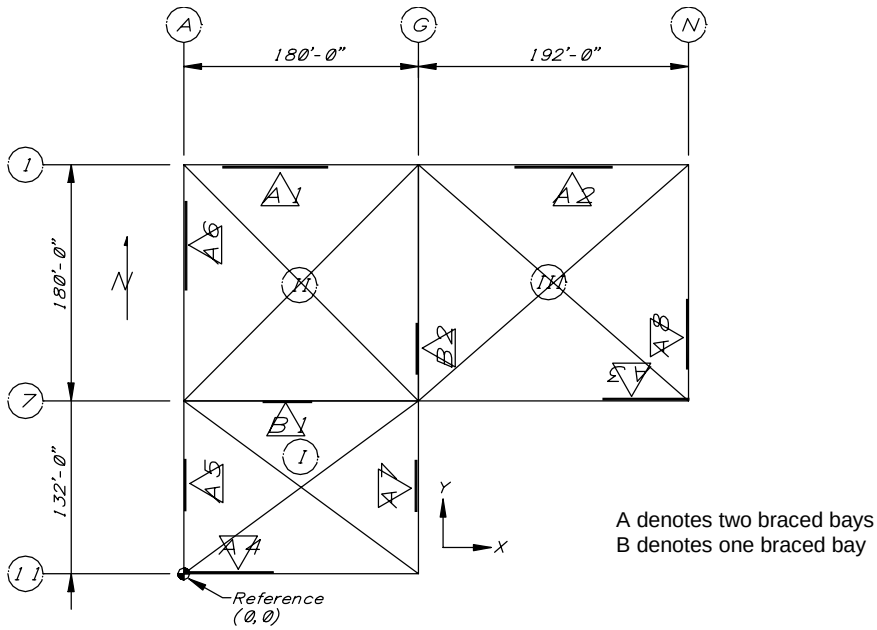

Figure 1A-14. Braced frame location plan

Table 1A-1. Building weight

Roof Weight (1)							
Mark[2]	w_{DL} *(psf)*	*Area (sf)*	W_i *(kips)*	X_{cg} *(ft)*	Y_{cg} *(ft)*	$W(X_{cg})$ *(lbs)*	$W(Y_{cg})$ *(lbs)*
I	71	23,760	1,687	90	66	151,826	111,339
II	71	32,400	2,300	90	222	207,036	510,689
III	71	34,560	2,454	276	222	677,238	544,735
Walls	15	16,416	246	168	175	41,368	43,092
Totals			6,687			1,077,468	1,209,855
∴	$X_{cg} = 1{,}077{,}468/6{,}687 = 161.1$; $Y_{cg} = 1{,}209{,}885/6{,}687 = 180.9$						
4th, 3rd, & 2nd Floor Weights (2)							
Mark[2]	w_{DL} *(psf)*	*Area (sf)*	W_i *(kips)*	X_{cg} *(ft)*	Y_{cg} *(ft)*	$W(X_{cg})$ *(lbs)*	$W(Y_{cg})$ *(lbs)*
I	72	23,760	1,711	90	66	153,965	112,908
II	72	32,400	2,333	90	222	209,952	517,882
III	72	34,560	2,488	276	222	686,776	552,407
Walls	15	20,520	308	168	175	51,710	53,865
Totals			6,840			1,102,404	1,237,061
∴	$X_{cg} = 1{,}102{,}404/6{,}840 = 161.1$; $Y_{cg} = 1{,}237{,}061/6{,}840 = 180.9$						

Note:

1. Roof weight: $w_{DL} = 66.0 + 5.0_{\text{add'lmech}} = 71.0\,\text{psf}$; exterior walls: $w_{\text{wall}} = 15\,\text{psf}$;

   wall area = $(7.5 + 4.5)(1{,}368\,\text{ft}) = 16{,}416\,\text{ft}^2$

2. $w_{DL} = 72.0\,\text{psf}$; exterior walls: $w_{\text{wall}} = 15\,\text{psf}$; wall area = $(15)(1{,}368\,\text{ft}) = 20{,}520\,\text{ft}^2$

Table 1A-2. Mass properties summary (1)

Level	W_{DL} *(kips)*	X_{cg} *(ft)*	Y_{cg} *(ft)*	*M* (2)	*MMI* (3)
Roof	6,687	161.1	180.9	17.3	316,931
4th	6,840	161.1	180.9	17.7	324,183
3rd	6,840	161.1	180.9	17.7	324,183
2nd	6,840	161.1	180.9	17.7	324,183
Total	27,207			70.4	

Notes:

1. Mass (M) and mass moment of inertia (MMI) are used in analysis for determination of fundamental period (T).
2. $M = (W/3.86.4)(\text{kip} \cdot \text{sec/in.})$
3. $MMI = (M/A)(I_x + I_y)(\text{kip} \cdot \text{sec}^2 \cdot \text{in})$

2b. Determine design base shear.

As noted above, Equation (30-5) governs, and design base shear is:

$$V = 0.172W = 0.172(27207) = \underline{\underline{4{,}680\,\text{kips}}}$$

2c. Determine vertical distribution of force. §1630.5

For the static lateral force procedure, vertical distribution of force to each level is applied as follows:

$$V = F_t + \sum F_i \qquad (30\text{-}13)$$

where:

$$F_t = 0.07T(V)$$

Except $F_t = 0$ where $T \le 0.7\,\text{sec}$ (30-14)

For this structure $F_t = 0$, and the force at each level is

$$F_x = \frac{(V - F_t)W_x h_x}{\sum W_i h_i} = V\left(\frac{W_x h_x}{\sum W_i h_i}\right) \qquad (30\text{-}15)$$

The vertical distribution of force to each level is given in Table 1A-3 below.

Table 1A-3. Distribution of base shear

Level	w_x *(kips)*	h_x *(ft)*	$w_x h_x$ *(k-ft)*	$\frac{w_x h_x}{\Sigma w_x h_x}$	F_x *(kips)*	ΣV *(kips)*
Roof	6,687	62	414,594	0.39	1,811.3	
4th	6,840	47	321,480	0.30	1,404.5	1,811.3
3rd	6,840	32	218,880	0.20	956.2	3,215.8
2nd	6,840	17	116,280	0.11	508.0	4,172.0
Total	27,207		1,071,234	1.00	4,680.0	4,680.0

2d. Determine horizontal distribution of force. §1630.6

Structures with concrete fill floor decks are generally assumed to have rigid diaphragms. Forces are distributed to the braced frames per their relative rigidities. In this Design Example, a three-dimensional computer model is used to determine the distribution of seismic forces to each frame.

For rigid diaphragms, an accidental torsion must be applied (in addition to any natural torsional moment), as specified in §1630.6. The accidental torsion is equal to that caused by displacing the center of mass 5 percent of the building dimension perpendicular to the direction of the applied lateral force.

For our structural computer model, this can be achieved by combining the direct seismic force applied at the center of mass at each level with the accidental torsional moment (M_z) at that level.

North-south seismic:

$$M_t = 0.05(372\,\text{ft})F_x = (18.6)F_x$$

East-west seismic:

$$M_t = 0.05(312\,\text{ft})F_x = (15.6)F_x$$

Using the direct seismic forces and accidental torsional moments given in Table 1A-4, the distribution of forces to the frames is generated by computer analysis. (For the computer model, member sizes are initially proportioned by preliminary hand calculations and then optimized by subsequent iterations.)

Table 1A-4. Accidental torsional moments

Level	F_x *(kips)*	*N-S* M_t *(k-ft)*	*E-W* M_t *(k-ft)*
Roof	1,811.3	33,690	28,256
4th	1,404.5	26,124	21,910
3rd	956.2	17,785	14,917
2nd	508.0	9,449	7,925

From the computer analysis, forces in each bracing member are totaled to obtain the seismic force resisted by each frame. The frame forces are then summed and compare to the seismic base shear for a global equilibrium check. Forces at the base of each frame are summarized in Table 1A-5 below:

Table 1A-5. Distribution of forces to frames

	Frame	*Direct Seismic (kips)*	*Torsional Force (kips)*	*Direct + Torsion (kips)*
East-West Direction	A1	1,023	61	1,084
	A2	1,067	65	1,132
	A3	1,063	26	1,089
	A4	1,018	87	1,105
	B1	509	12	521
	Total	4,680		4,931
North-South Direction	A5	977	77	1,054
	A6	937	76	1,013
	A7	1,005	13	1,018
	A8	1,280	134	1,414
	B2	481	6	487
	Total	4,680		4,986

Note that the torsional seismic component is always additive to the direct seismic force. Sections 1630.6 and 1630.7 require that the 5 percent center-of-mass displacement be taken from the calculated center-of-mass, and that the most severe combination be used for design.

2e. Determine horizontal torsional moments. §1630.7

As shown above, the accidental torsional moment has been accounted for as required by §1630.6. However, we must check for a torsional irregularity (per Table 16-M, Type 1) to determine if a torsional amplification factor (A_x) is required under the provisions of §1630.7.

Torsional irregularity exists when the drift at one end of the structure exceeds 1.2 times the average drifts at both ends, considering both direct seismic forces plus accidental torsion. For this evaluation, total seismic displacements at the roof level are compared. The displacements in Table 1A-6 below are taken from the computer model for points at the extreme corners of the structure.

Table 1A-6. Roof displacements

North-South Direction	@ Line A	@ Line N	Average	Ratio (max/avg)
	0.95 in	1.3 in	1.125	1.16 o.k.
East-West Direction	@ Line 1	@ Line 11	Average	Ratio (max/avg)
	1.05 in	1.22 in	1.135	1.07 o.k.

Because the maximum drift is less than 1.2 times the average drift, no torsional irregularity exists. The relative displacements at the 2nd, 3rd, and 4th floors are similar to those at the roof; no torsional irregularities were found to exist at those levels.

3. Interstory drift.

3a. Determine Δ_s and Δ_m. §1630.9

The design level response displacement (Δ_S) is obtained from a static elastic analysis using the seismic forces derived from the design base shear. When determining displacements, §1630.10.3 eliminates the upper limit on T_B, allowing for a reduction in seismic forces calculated using Equation (30-4). For this example, the base shear could be reduced about 5 percent using T_B with Equation (30-4), with a proportional reduction in calculated drifts.

The maximum inelastic response displacement (Δ_M) includes both elastic and estimated inelastic drifts resulting from the design basis ground motion:

$$\Delta_M = 0.7(R)\Delta_S = 0.7(6.4)\Delta_S = 4.48\Delta_S \qquad (30\text{-}17)$$

The greatest calculated values for Δ_S and Δ_M are to be used, including torsional effects. For determination of Δ_M, $P\Delta$ effects must be included. Story drift ratios are calculated from lateral displacements at each level for both the north-south and east-west directions (as generated by the computer analysis), and are presented in the Table 1A-7.

Table 1A-7. Story displacements and drift ratios

	Story	Height (in.)	Δ_S (in.)	Δ_M (in.)	Drift Ratio (1) (2)
North-South Displacements	4th	180	(1.30-1.04) = 0.26	1.16	0.0064
	3rd	180	(1.04-0.70) = 0.34	1.52	0.0084
	2nd	180	(0.70-0.34) = 0.36	1.61	0.0089
	1st	204	(0.34-0.0) = 0.34	1.52	0.0075
East-West Displacements	4th	180	(1.22-0.98) = 0.24	1.08	0.0060
	3rd	180	(0.98-0.67) = 0.31	1.39	0.0077
	2nd	180	(0.67-0.34) = 0.33	1.48	0.0082
	1st	204	(0.34-0.0) = 0.34	1.52	0.0075

Notes:

1. Interstory drift ratio $= \Delta_M$ /story height.
2. Maximum drift occurs at Line N for north-south direction and Line 11 for east-west direction.

3b. Determine story drift limitation. §1630.10

Story drift limits are based on the maximum inelastic response displacements, Δ_M. For structures with $T < 0.7$ the maximum allowable drift is 0.025 times the story height. A review of drift ratios tabulated in Table 1A-7 shows that all interstory drift ratios are less than 0.025 using the period of Equation (30.4). (**Note:** Using the full value for T_B would result in a lower base shear and smaller story displacement.)

4. Typical diaphragm design.

The building has rigid diaphragms at all levels, including the roof. In this Part, seismic forces on each diaphragm will be determined, and the roof level diaphragm designed. The roof was selected because it is the most heavily loaded diaphragm.

4a. Determine diaphragm load distribution. §1633.2.9

In multistory buildings, diaphragm forces are determined by the following formula:

$$F_{px} = \frac{F_t + \sum F_i}{\sum w_i}\left(w_{px}\right) \qquad (33\text{-}1)$$

where:

$$0.5C_a IW_{px} < F_{px} \leq 1.0C_a IW_{px} \qquad \text{§1633.2.9 Item 2}$$

The diaphragm forces at each level, with the upper and lower limits, are calculated as shown in Table 1A-8.

Table 1A-8. Diaphragm forces (kips)

Level	F_i	ΣF_i	w_x	Σw_i	F_{px}	$0.5C_aIw_{px}$	$1.0C_aIw_{px}$
Roof	1,811.3	1,811.3	6,687	6,687	1,811.3	1,471.1	2,942.3
4th	1,404.5	3,215.8	6,840	13,527	1,626.1	1,504.8	3,009.6
3rd	956.2	4,172.0	6,840	20,367	1,401.1	1,504.8	3,009.6
2nd	508.0	4,680.0	6,840	27,207	1,176.6	1,504.8	3,009.6

Note: $C_a = 0.44$ and $I = 1.0$.

4b. Determine diaphragm shear.

The maximum diaphragm design force occurs at the roof level. To facilitate diaphragm and collector design, this force is divided by the plan area to obtain an average horizontal seismic force distribution, q_{roof}.

$$q_{roof} = \frac{1{,}811}{90{,}720} = 0.020\,\text{kips/ft}^2$$

The maximum diaphragm span occurs between Lines A and N, so the north-south direction will control. Both loading and shear for the roof diaphragm under north-south seismic forces are shown in Figure 1A-15.

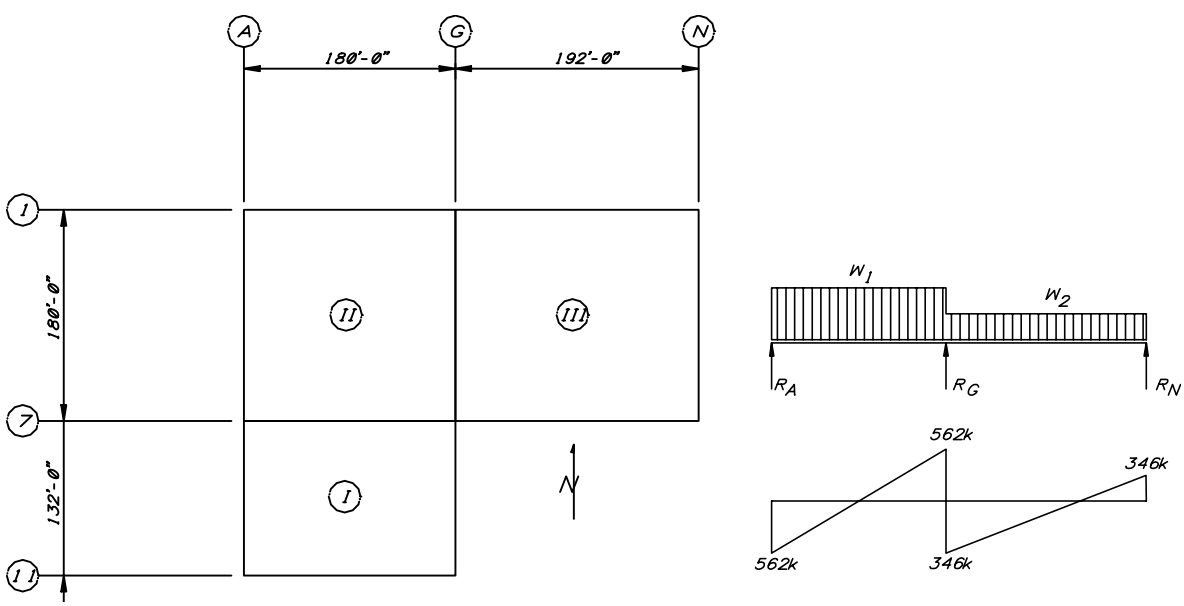

Figure 1A-15. Roof diaphragm north-south seismic load and shear

The computer model assumes rigid diaphragms or load distribution to the frames. In lieu of an exact analysis, which considers the relative stiffness of the diaphragm and braced frames, we envelop the solution by next considering the diaphragms flexible. Shears at each line of resistance are derived assuming the diaphragms span as simple beam elements under a uniform load.

$$w_1 = q_{roof}\,(312\,\text{ft}) = 0.020(312) = 6.24\,\text{kips/ft}$$

$$w_2 = q_{roof}\,(180\,\text{ft}) = 0.020(180) = 3.6\,\text{kips/ft}$$

Diaphragm shears:

$$V_A = V_{GA} = 6.24\left(\frac{180}{2}\right) = 562\,\text{k}$$

$$V_{GN} = V_N = 3.6\left(\frac{192}{2}\right) = 346\,\text{k}$$

To fully envelop the solution, we compare the flexible diaphragm shear at Line N with the force resisted by Frame A8 (Figure 1A-14) assuming a rigid diaphragm. From the computer model, we find at Frame A8: $F_{roof} = 440\,\text{k}$. The force from the rigid analysis (440 k) is greater than the force from the flexible analysis (346 k), so the greater force is used to obtain the maximum diaphragm shear at Line N:

$$q_N = 440/180 = 2.44\,\text{k/ft} \text{ at Line N} \qquad \text{§1612.3.2}$$

Using allowable stress design and the alternate load combinations of §1612.3.2, the (12-13) basic load combination is:

$$\left(\frac{E}{1.4}\right) \qquad (12\text{-}13)$$

Maximum design shear:

$$q_N = \left(\frac{2.44}{1.4}\right) = 1.74\,\text{kips/ft}$$

With 3-1/4 inch lightweight concrete over $3'' \times 20$ gauge deck, using 4 puddle welds per sheet, the allowable deck shear per the manufacturer's ICBO evaluation report is:

$$V_{\text{allow}} = 1.75 > 1.74\,\text{kips/ft} \qquad o.k.$$

Other deck welds (e.g., parallel supports, seam welds) must also be designed for this loading.

At seismic collectors, it is good practice to place additional welded studs in every low flute of the deck for shear transfer.

4c. **Determine collector and chord forces.**

Using a flexible analysis and assuming diaphragm zone III acts as a simple beam between Lines G and N (Figure 1A-16), for north-south seismic loads the maximum chord force on lines 1 and 7 is:

$$CF = \frac{wl^2}{8d} = \frac{3.6(192)^2}{8(180)} = 92.2\,\text{kips}$$ §1633.2.9 Items 6 and 7

Note that this value must be compared to the collector force at Lines 1 and 7, and the largest value used for design.

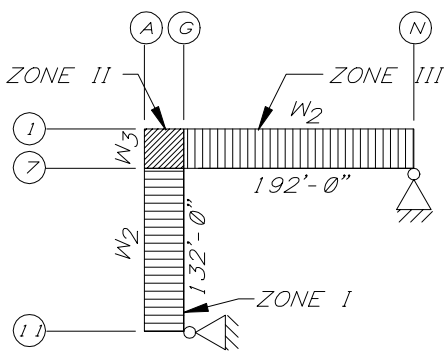

Figure 1A-16. Roof diaphragm zones

For structures with plan irregularity type 2, the code disallows the one-third stress increase for allowable stress design for collector design (§1633.2.9, Item 6). This code section also requires chords and collectors be designed considering "independent movement of the projecting wings," for motion of the wings in both the same and opposing directions. There are two ways to achieve this:

1. Use a three dimensional computer model with membrane or thin-shell diaphragm elements to capture the relative stiffness between the floor and braces.

2. Make a simplifying assumption that gives reasonable values for collector forces at the re-entrant corner.

For this example, the second option is chosen.

If each wing is assumed to be flexible relative to the central diaphragm (Zone II), the wings can be considered as "fixed-pinned" beams. The maximum moment at Line G is:

$$M_{fixed} = \frac{w_2 l^2}{8} = \frac{3.6(192)^2}{8} = 16{,}589 \text{ kips-ft}$$

The maximum tie force (T_G) along Lines 1 and 7 at the intersections with Line G is:

$$T_G = 16{,}589/180 = 92.2 \text{ kips}$$

With allowable diaphragm shear of 75 k/ft, this tie force must be developed back into diaphragm zone II over a length of at least:

$$\frac{92.2 \text{ kips}}{(1.4)1.75 \text{ kips/ft}} = 37.6 \text{ ft}$$

Next, the collector forces for east-west seismic loads are determined. For Zone III between Lines 1 and 7, the equivalent uniform lateral load is:

$$w_3 = q(\text{depth}) = 0.020(372) = 7.44 \text{ k/ft}$$

The collector force at Line 1 is:

$$R_1 = 7.44(180/2) = 670 \text{ kips}$$

From the computer model, at the roof level the frames on Line 1 (Frames A1 and A2) resist loads of 405 kips and 425 kips, respectively.

$$R_1 = 405_{A1} + 425_{A2} = 830 \text{ kips} > 670 \text{ kips}$$

Therefore, the "rigid diaphragm" analysis governs, and the shear flow along Line 1 (q_1), is:

$$q_1 = 830/372 = 2.23\,\text{kips/ft}$$

As shown in Figure 1A-17, collector forces at points a, b, c, and d are:

$$F_a = 2.23(30) = 67\,\text{kips}$$

$$F_b = 2.23(90) + 405 = 204\,\text{kips}$$

$$F_c = 2.23(244) + 405 = 140\,\text{kips}$$

$$F_d = 2.23(64) = 143\,\text{kips}$$

The maximum collector force as shown in Figure 1A-17 is $T = 204\,\text{kips}$.

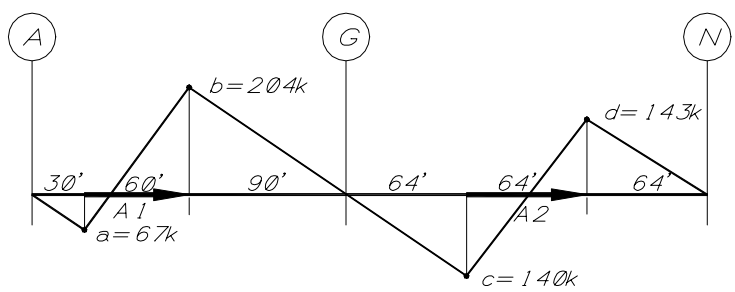

Figure 1A-17. Collector force diaphragm at Line 1

The collector forces for east-west seismic loads exceed the chord forces calculated for north-south seismic, and therefore govern the collector design at Line 1.

Use maximum $T_1 = 204\,\text{kips}$ and minimum $T_1 = 140\,\text{kips}$.

The collector element can be implemented using either the wide flange spandrel beams and connections or by adding supplemental slab reinforcing. In this example, supplemental slab reinforcing is used. Under §1633.2.6, using the strength design method, collectors must be designed for the special seismic load combinations of §1612.4.

$$E_m = T_m = \Omega_o T = (2.2)T \qquad \text{§1633.2.6}$$

Using the factored loads of §1612.4:

$$T_{mu} = (1.0)E_m = (1.0)(2.2)T \qquad \text{§1612.4}$$

$$\text{Maximum } T_{mu} = 2.2(204) = 449 \text{ kips} \qquad (30\text{-}2)$$

$$\text{Minimum } T_{mu} = 2.2(140) = 308 \text{ kips}$$

$$\text{Maximum } A_s = T_{mu}/\phi f_y = 449/0.9(60) = 8.3 \text{ in.}^2 \qquad (12\text{-}18)$$

$\therefore$ Use 11-#8 $\left(A_s = 8.69 \text{ in.}^2\right)$

$$\text{Minimum } A_s = 308/0.9(60) = 5.7 \text{ in.}^2$$

$\therefore$ Use 8-#8 (A_s = 6.32 in.^{2})

On Line 1, place 8-#8 bars continuous from Lines A to N, and additional 3-#8 (for a total of 11) along frame A1 to Line G. With slab reinforcing, the collected load must be transferred from the slab to the frame. This can be done with ¾" diameter headed studs, again using the special seismic load combination of §1612.4.

At Frame A1:

$$v_u = 1.0\left(\frac{\Omega_o F_{A1}}{L_{A1}}\right) = \frac{1.0(2.2)405}{60} = 14.9 \text{ kips/ft}$$

The shear strength of ¾" diameter headed studs as governed in this case by the concrete strength $\left(f'_c = 3{,}000 \text{ psi}\right)$ is derived from §1923.3.3:

$$\phi V_c = \phi 800 A_b \lambda \sqrt{f'_c} = 0.65(800)(0.44)(0.75)\sqrt{3{,}000}/1{,}000$$

$$= 9.4 \text{ kips/stud} \qquad \text{§1923.3.3}$$

The required number of studs per foot (n) is:

$$n = \frac{14.9 \text{ kips/ft}}{9.4 \text{ kips/stud}} = 1.59 \text{ studs/ft}$$

$\therefore$ Use 2-3/4" diameter studs at 12-inch cc over length of Frame A1.

5. Braced frame member design. §2212

In this part, the design of a typical bay of bracing is demonstrated. The design bay, taken from Elevation A, Figure 1A-4, is shown in Figure 1A-18. Member axial forces and moments are given for dead, live, and seismic loads as output from the computer model. All steel framing will be designed per Chapter 22, Division V, Allowable Stress Design. Requirements for special concentrically braced frames are given in §2213.9 of Chapter 22.

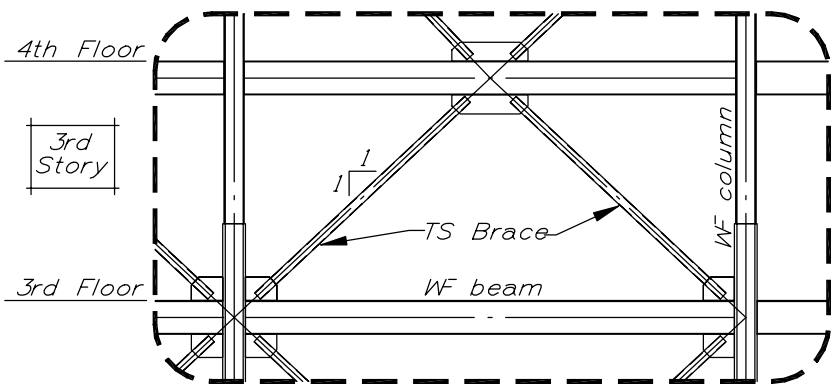

Figure 1A-18. Typical braced bay

TS brace @ 3rd story:

$P_{DL} = 24$ kips

$P_{LL} = 11$ kips

$P_{seis} = 348$ kips

$P_E = \rho\left(P_{seis}\right) = 1.0(348) = 348$ kips

WF beam @ 3rd floor:

$M_{DL} = 1{,}600$ kip-in.

$M_{LL} = 1{,}193$ kip-in.

$V_{DL} = 14.1$ kips

$V_{LL} = 10.3$ kips

$P_{seis} = 72\,\text{kips}$

$P_E = \rho\left(P_{seis}\right) = 1.0(72) = 72\,\text{kips}$

WF column @ 3rd story:

$P_{DL} = 67\,\text{kips}$

$P_{LL} = 30\,\text{kips}$

$P_{seis} = 114\,\text{kips}$

$M_{seis} \approx 0$

$P_E = 1.0\left(P_{seis}\right) = 1.0(114) = 114\,\text{kips}$

5a. **Diagonal brace design at the 3rd story.** **§1612.3.1**

The basic ASD load combinations of §1612.3.1 with no one-third increase are used.

$$D + \frac{E}{1.4}:\ P_1 = 24 + \frac{348}{1.4} = 273\,\text{k}\ \ \text{(compression)} \tag{12-9}$$

$$0.9D \pm \frac{E}{1.4}:\ P_2 = 0.9(24) - \frac{348}{1.4} = -227\,\text{kips}\ \ \text{(tension)} \tag{12-10}$$

$$D + 0.75\left[L + \left(\frac{E}{1.4}\right)\right]:\ P_3 = 24 + 0.75\left[11 + \frac{348}{1.4}\right] = 219\,\text{kips}\ \ \text{(compression)} \tag{12-11}$$

The compressive axial load of Equation (12-9) controls. The clear unbraced length (l) of the TS brace is 18.5 feet, measured from the face of the beam or column. Assuming $k = 1.0$ for pinned end,

$kl = 1.0(18.5) = 18.5\,\text{ft}$ §2213.9.2.1

Maximum slenderness ratio: $\dfrac{kl}{r} \le \dfrac{1{,}000}{\sqrt{F_y}}$

For a tube section, $F_y = 46\,\text{ksi} \therefore \dfrac{1{,}000}{\sqrt{46}} = 147.4$

Minimum $r = \dfrac{kl}{147.4} = \dfrac{12(18.5)}{147.4} = 1.51\text{in.}$ §2213.9.2.4

Maximum width-thickness ratio $\left(\dfrac{b}{t}\right) \le \dfrac{110}{\sqrt{F_y}} = 16.2$

Try TS $8 \times 8 \times 5/8$:

$r = 2.96 > 1.51\text{in.}$ *o.k*

$\dfrac{b}{t} = \dfrac{8}{0.625} = 12.8 < 16.2$ *o.k.*

For $kl = 19\,\text{ft}, P_{allow} = 324\,\text{kips} > 273\,\text{kips}$ *o.k.* AISC-ASD, pp. 3-41

$\therefore$ Use TS$8 \times 8 \times 5/8$

5b. **Girder design at the 3rd floor.**

The girder will be designed using the basic load combinations of §1612.3.1 as noted above. The loads are:

$D + L$: $M_{D+L} = 1{,}600 + 1{,}193 = 2{,}793$ kip-in. (12-8)

$D \pm \dfrac{E}{1.4}$: $P_{seis} = \dfrac{72}{1.4} = 51.4\,\text{kips}$ (12-9)

$M_{DL} = 1{,}600$ kip-in.

$D + 0.75\left[L + \left(\dfrac{E}{1.4}\right)\right]$: $P_{seis} = 0.75\left(\dfrac{72}{1.4}\right) = 38.6\,\text{kips}$ (12-11)

$M_{D+L+seis} = 1{,}600 + 0.75(1{,}193) = 2{,}495\,\text{kip-in.}$

For the girder, use ASTM A36 steel with $F_y = 36\,\text{ksi}$. Assume that the bottom beam flange is braced at third points

$$\therefore l_y = \frac{30}{3} = 10.0 \text{ ft}$$

As a starting point for design, assume a beam with a cross-section area of area of $20\,\text{in.}^2$ Find the required beam section modulus.

$$f_a = \frac{51.4}{20} = 2.6\,\text{ksi}\text{, and maximum } F_a = 0.6(36) = 21.6\,\text{ksi} \text{ then,}$$

$$\frac{f_a}{F_a} = \frac{2.6}{21.6} = 0.12$$

For an allowable bending stress, use:

$$f_b = (1 - 0.12)(0.60)(36) = 19.0\,\text{ksi}$$

$$\therefore S_{req'd} \frac{2{,}793}{19.0} = 147\,\text{in.}^3$$

Try $W24 \times 68$ beam

$$S = 154 \text{ in.}^3$$

$$\text{A} = 20.1 \text{ in.}^2$$

$$r_x = 9.55 \text{ in.}$$

$$r_y = 1.87 \text{ in.}$$

$$\left(\frac{kl}{r}\right)_x = \frac{12(30)}{9.55} = 37.7$$

$$\left(\frac{kl}{r}\right)_y = \frac{12(10.0)}{1.87} = 64.2$$

$F_a = 17.02\,\text{ksi}$ (compression governs) AISC-ASD, pp. 3-16

$$\text{Maximum } f_a = \frac{51.4}{20.1} = 2.55\,\text{ksi}$$

$$\frac{f_a}{F_a} = \frac{2.55}{17.02} = 0.149 < 0.15 \qquad o.k.$$

For combined stresses, use AISC Equation H1-3. AISC-ASD Part 5, Ch. H

Check load combination of Equation (12-8).

$$\frac{f_b}{F_b} = \frac{2{,}793}{154(21.6)} = 0.84 < 1.0 \qquad o.k.$$

Check load combination of Equation (12-9).

$$\frac{f_a}{F_a} + \frac{f_b}{F_b} = \frac{2.55}{17.02} + \frac{1{,}600}{154(21.6)} = 0.15 + 0.48 = 0.63 < 1.0 \qquad o.k.$$

Check load combination of Equation (12-11).

$$\frac{f_a}{F_a} + \frac{f_b}{F_b} = \frac{38.6}{20.1(17.02)} + \frac{2{,}495}{154(21.6)} = 0.11 + 0.75 = 0.86 < 1.0 \qquad o.k.$$

$\therefore$ Use $W24\times68$ girder

Note that §2213.9.1 requires the girders to be continuous through brace connections between adjacent columns. For chevron bracing configurations, several additional requirements are placed on the girder design. Those requirements are addressed in Design Example 1C. The X-bracing configuration shown in this Example ensures the desired post-buckling capacity of the braced frame without inducing the large unbalanced seismic loading on the girder that occurs in a chevron brace configuration.

5c. Column design at the 3rd floor.

The frame columns will also be designed using the basic load combinations of §1612.3.1 with no one-third increase.

$$D + L:\ P_0 = 67 + 30 = 97\,\text{kips (compression)} \tag{12-8}$$

$$D + \frac{E}{1.4}:\ P_1 = 67 + \frac{114}{1.4} = 148.4\,\text{kips (compression)} \tag{12-9}$$

$$0.9D \pm \frac{E}{1.4}: \quad P_2 = 0.9(67) - \frac{114}{1.4} = 21.1\,\text{kips} \ \text{(tension)} \tag{12-10}$$

$$D + 0.75\left[L + \left(\frac{E}{1.4}\right)\right]: \ P_3 = 67 + 0.75\left[30 + \frac{114}{1.4}\right] = 150.6\,\text{kips} \ \text{(compression)} \tag{12-11}$$

Per the requirements of §2213.9.5, the columns must have the strength to resist the special column strength requirements of §2213.5.1:

$$P_{DL} + 0.7P_{LL} + \Omega_o P_E:$$

$$P_{comp} = 67 + 0.7(30) + 2.2(114) = 339\,\text{kips} \ \text{(compression)} \qquad \text{§2213.9.5, Item 1}$$

$$0.85P_{DL} \pm \Omega_o P_E:$$

$$P_{tens.} = 0.85(67) - 2.2(114) = -194\,\text{kips} \ \text{(tension)} \qquad \text{§2213.5.1, Item 2}$$

For the columns, ASTM A36 steel with $F_y = 36\,\text{ksi}$ will be used.

The unbraced column height (floor height less ½ beam depth) is:

$$h = 15 - 1 = 14\,\text{ft}$$

Try a $W10 \times 49$ column with $kl = 14\,\text{ft}$

$$P_{allow} = 242\,\text{kips} > 150.6\,\text{kips} \qquad o.k. \qquad \text{AISC-ASD, pp. 3-30}$$

Check the column for the special column strength requirements of §2213.5 using member strength per §2213.4.2:

$$P_{sc} = 1.7P_{allow}$$

$$P_{sc} = 1.7(242) = 411 > 339\,\text{kips} \ \text{(compression)} \qquad o.k.$$

$$P_{st} = F_y A = 36(14.4) = 518.4 > 194\,\text{kips} \ \text{(tension)} \qquad o.k. \qquad \text{§2213.4.2}$$

Note that §2213.5.2 places special requirements on column splices. To ensure the column splice can meet the ductility demand from the maximum earthquake force (E_m), full-penetration welds at splices are recommended. The splice must occur within the middle one-third of the column clear height, not less than 4 feet above the beam flange.

Finally, §2213.9.5 requires that the columns meet the width-thickness ratio limits of §2213.7.3:

$$\frac{b_f}{2t_f} \le 8.5 \text{ for } F_y = 36\,\text{ksi}$$ §2213.7.3

For a $W10\times49$ $\frac{b_f}{2t_f} = \frac{10}{2}(0.56) = 8.9 > 8.5$ *no good* Division III, §2251N7

Try a $W10\times54$

$$\frac{b_f}{2t_f} = 8.1 < 8.5 \quad o.k.$$ AISC-ASD, pp. 5-96

Thus, the column design is governed by the local buckling compactness criterion.

$\therefore$ Use $W10$ x 54

6. Bracing connection design.

In this part, the connection of the $\text{TS}8\times8$ brace to the $W10$ column and $W24$ girder will be designed. Connection of the braces to the mid-span of the girder is similar, and is shown in Example 1C.

6a. Determine connection design forces. §2213.9.2

Section 2213.9.3.1 requires that bracing connections have the strength to resist the lesser of:

3. The strength of the brace in axial tension, P_{st}.
4. Ω_o times the design seismic forces, plus gravity loads.
5. The maximum force that can be transferred to the brace by the system.

For the $\text{TS}8\times8\times5/8$ brace used in the design bay, the connection force is taken as the lesser of:

$$P_{st} = F_y A = 46(17.4) = 800.4 \text{ kips} \qquad \textit{controls}$$

or:

$$P_m = P_D + P_L + \Omega_o P_E = (24 + 11) + 2.2(348) = 800.6 \text{ kips}$$

$\therefore$ Use 800.4 kips for design

6b. Design procedure using the uniform force method.

Based on research by AISC [Thornton, 1991], the Uniform Force Method (UFM) has been presented as an efficient, reliable procedure for design of bracing connections. The basis for the UFM is to configure the gusset dimensions so that there are no moments at the connection interfaces: gusset-to-beam; gusset-to-column; and beam-to-column. [For more information on the UFM, refer to AISC 1994 LRFD, Volume II, *Connections*.]

Figure 1A-19 illustrates the gusset configuration and connection interface forces for the UFM. Note that the distances to the centroids of the gusset connection, $\propto$ and β, are coincident with the brace centerline. To achieve the condition of no moments at the interfaces, the following relationship must be satisfied:

$$\propto - \beta \tan\theta = e_b \tan\theta - e_c$$

The connection forces are then given by these equations:

$$r = \sqrt{(\alpha + e_c)^2 + (\beta + e_b)^2}$$

$$H_b = \left(\frac{\alpha}{r}\right)P$$

$$V_b = \left(\frac{e_b}{r}\right)P$$

$$V_c = \left(\frac{\beta}{r}\right)P$$

$$H_c = \left(\frac{e_c}{r}\right)P$$

If the connection centroids do not occur at $\propto$ and β, moments are induced on the connection interface. The UFM can also be applied to this condition (see the *LRFD Connections* manual for the Special Case No. 2 example). In some cases, it may be beneficial to first select proportions for the gusset, then design the welds using unbalanced moments computed per the UFM Special Case No. 2.

6c. Gusset plate configuration and forces.

Application of the UFM essentially involves selecting of gusset dimensions, then analyzing plate and connection stresses and capacities at the interfaces. It is inherently a trial and error solution, and can readily be formatted for a spreadsheet solution. For this example, welded connections are used from gusset-to-beam and gusset-to-column. The beam-to-column connection will be made with high-strength bolts.

A suggested starting point for determining the length of weld between gusset and column (2β) is to assume half the total length of weld to the brace. Note that per the AISC reference, these welds should be designed for the larger of the peak stress or 140 percent of the average stress. The 40 percent increase is intended to enhance ductility in the weld group, where gusset plates are welded directly to the beam or column.

For this example brace connection, these parameters are fixed:

$$\theta = 45°$$

$$e_c = \frac{10.0}{2} = 5.0'' \quad (W10\times54)$$

$$e_b = \frac{23.7}{2} = 11.9'' \quad (W24\times68)$$

$$\alpha - \beta\tan\theta = e_b\tan\theta - e_c$$

$$\alpha - \beta(1.0) = 11.9(1.0) - 5.0$$

$$\therefore\ \alpha = 6.9 + \beta$$

After a few trials, the following are selected: $\alpha = 15.9''$ and $\beta = 9.0''$

Using the axial strength of the brace, $P_{st} = 800.4\,\text{kips}$, the connection interface forces are as follows:

$$r = \sqrt{(15.9+5)^2 + (9.0+11.9)^2} = 29.56''$$

Gusset-to-beam:

$$H_b = 800.4\left(\frac{15.9}{29.56}\right) = 431\,\text{kips},\ V_b = 800.4\left(\frac{11.9}{29.56}\right) = 322\,\text{kips}$$

Gusset-to-column:

$$V_c = 800.4\left(\frac{9.0}{29.56}\right) = 244\,\text{kips}\,,\ H_c = 800.4\left(\frac{5.0}{29.56}\right) = 135\,\text{kips}$$

From review of the computer output for the braced frame at the third floor, the collector force (A_b) to the beam connection is:

$$\underline{\underline{A_b = 41\,\text{kips}}}$$

6d. **Brace-to-gusset design.**

Bracing connections must have the strength to develop brace member forces per §2213.9.3.1. The capacities of the connection plates, welds and bolts are determined under §2213.4.2.

Determine TS brace weld-to-gusset.

For 5/8-in. tube, minimum fillet weld is ¼-in. Try ½-in. fillet weld using E70 electrodes.

Per inch, weld capacity $= 1.7(8)(0.928) = 12.62$ kips-in. AISC-ASD Table J2.5

$$l_{req} = \frac{800.4}{12.62\,(2)(2)} = 15.9''\ \text{@ 4 locations}$$

$\therefore$ Use 18-inches of ½-in. fillet each side, each face

Check minimum gusset thickness for block shear:

$$R_{BS} = (1.7)\left[0.30A_vF_u + 0.50A_tF_u\right]$$

$$F_u = 58\,\text{ksi}\ \ \text{(A36 plate)}$$

where:

A_v = net shear area

A_t = net tension area

For TS 8×8 with $L_{weld} = 18$ in.

$$A_v = 2(18)t\,,\ A_t = (8)t$$

$$R_{BS} = (1.7)[0.3(36) + 0.5(8)](58)(t_{min}) = 1{,}361 \text{kips}$$

$$t_{min} = 0.93 \text{ in.}$$

$\therefore$ Use 1-in. plate gusset minimum, ASTM A36, $F_y = 36$ ksi

Check gusset plate compression capacity. §2213.9.3.3

Section 2213.9.3.3 requires the gusset plate to have flexural strength exceeding that of the brace, unless the out-of-plane buckling strength is less than the in-plane buckling strength and a setback of $2t$ is provided as shown in Figure 1A-19. The gusset plate must also be designed to provide the required compressive capacity without buckling. The $2t$ setback is a minimum requirement. A setback of $3t$ provides for construction tolerance for brace fit-up, and should be considered during design.

From Figure 1A-19, the gusset plate provides much greater in-plane fixity for the tube. The effective length factor (k) for out-of-plane buckling is by observation greater than the in-plane factor (k), so the out-of-plane buckling strength will be less than the in-plane buckling strength. The setback of $2t$ promotes enhanced post-buckling behavior of the brace by allowing for hinging in the gusset instead of the brace.

The gusset plate must be designed to carry the compressive strength of the brace without buckling. Using the Whitmore's Method (see AISC LRFD Manual Vol. II), the effective plate width at Line A-A of Figure 1A-19a is:

$$b = \text{tube width} + 2(\lambda_w)\tan 30° = 8 + 2(18)\tan 30° = 28.8 \text{in.}$$

The unsupported plate length L_u is taken as the centerline length from the end of the brace to the edge of beam or column. From Figure 1-19a, this length measures 20 in. As recommended by Astaneh-Asl [1998], a value of $k = 1.2$ will be used.

Maximum $l_u = 20$ in.

$$r = \frac{t}{\sqrt{12}} = \frac{1.0}{3.464} = 0.289 \text{ in.}$$ AISC-ASD, Table C-36

$$\frac{kl}{r} = \frac{1.2(20)}{0.289} = 83.0 \therefore \text{ for } F_y = 36 \text{ ksi}, \quad F_a = 15.0 \text{ ksi}$$

Gusset capacity:

$$P_{plate} = 1.7(1.0)(28.8)(15.0) = 734 \text{ kips}$$ §2213.4.2

TS 8×8 brace compression capacity:

$$P_{brace} = 1.7(324) = 551 < 734\,\text{kips} \qquad o.k.$$

Comment: Where tube sections are slotted for gusset plates, as shown in Figure 1A-19, recent testing has shown that over-cut slots are of concern. Net section fracture at the end of the slot should be checked considering shear lag at the connection. If required, it is recommended that the tube section be reinforced with a cover plate at the end of the slot.

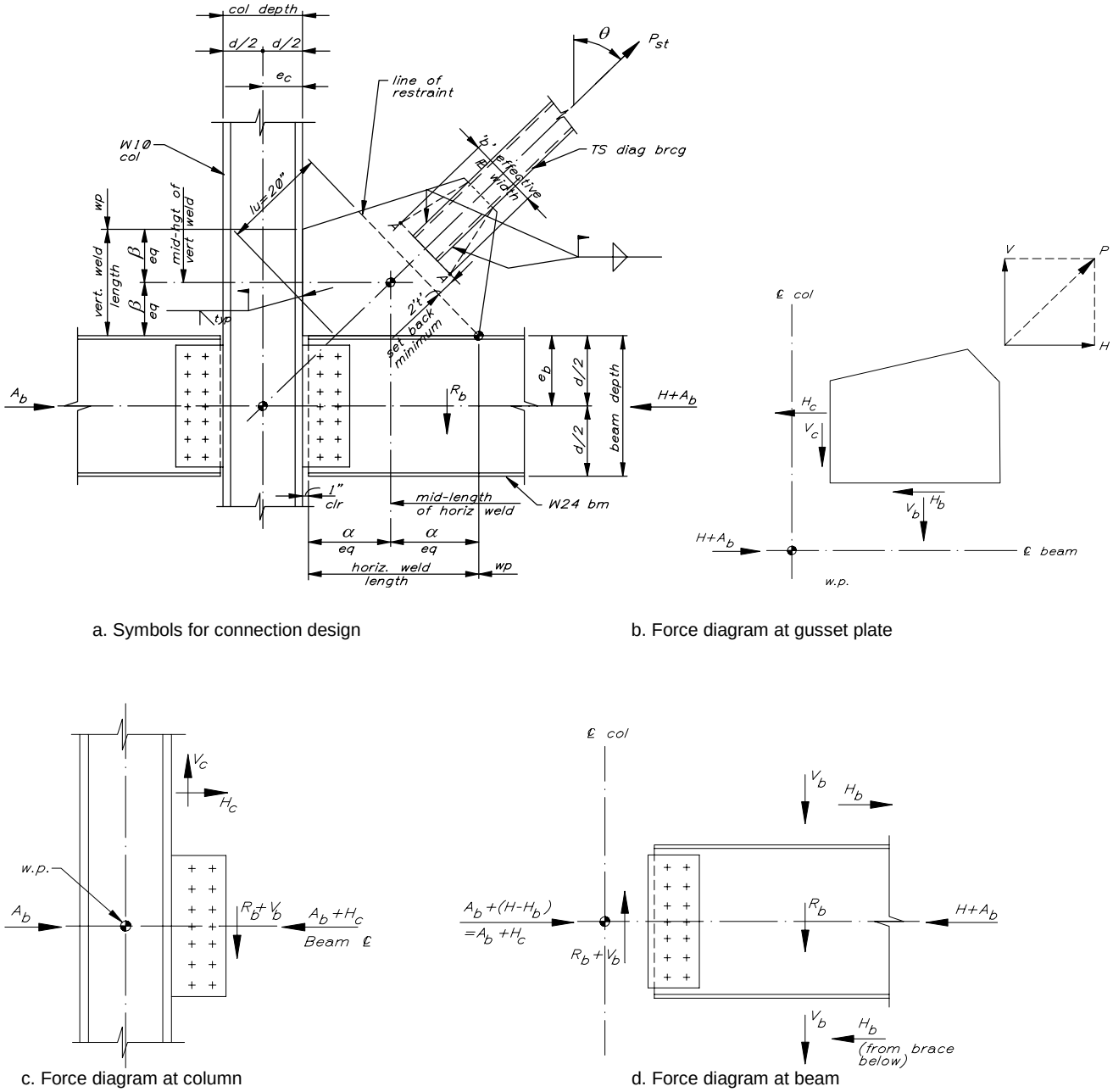

a. Symbols for connection design

b. Force diagram at gusset plate

c. Force diagram at column

d. Force diagram at beam

Figure 1A-19. Connection design using the uniform force method (UFM)

6e. Gusset-to-beam design.

In this section, the connection of the 1-inch-thick plate gusset to the *W*24 beam will be designed. The weld length from gusset to beam is the plate length less the 1-inch clear distance between the beam and column.

$$l_w = 2(15.9 - 1.0_{clr}) = 29.8''$$

Per inch of effective throat area, weld stresses are:

$$f_x = \frac{H_b}{2(l_w)} = \frac{431}{2(29.8)} = 7.23\,\text{ksi} \;\; (x\text{-component})$$

$$f_y = \frac{V_b}{2(l_w)} = \frac{322}{2(29.8)} = 5.40\,\text{ksi} \;\; (y\text{-component})$$

$$f_r = \sqrt{(7.23)^2 + (5.40)}^2 = 9.0\,\text{ksi} \;\; (\text{resultant})$$

For E70 electrodes, the allowable weld strength is: §2213.4.2

$$F_w = 1.7(0.3)(70\,\text{ksi}) = 35.7\,\text{ksi}$$

The required weld size is:

$$t_{weld} = \frac{9.0}{35.7(0.707)} = 0.36\,\text{in.}$$

Under AISC specifications (Table J2.4), the minimum weld for a 1-inch gusset plate is 5/16-in., but as noted in Part 6c, we increase the weld size by a factor of 1.4 for ductility.

$$t_{weld} = 0.36(1.4) = 0.50\,\text{in.} \;\; \text{use ½-in. fillet weld}$$

Comparing the double-sided fillet to the allowable plate shear stress, the minimum plate thickness is:

$$t_{pl} = \frac{2(0.707)(21)(0.50)}{0.4(36.0)} = 1.0 \;\; \text{in.}$$

$\therefore$ 1-inch plate *o.k.*

Check compressive stress in web toe of $W24\times68$ beam:

$$t_w = 0.415 \text{ in.}$$

$$k = 1.375 \text{ in.}$$

$$N = l_w = 29.8 \text{ in.}$$

$$R = V_b = 322 \text{ kips}$$

$$\frac{R}{t_w(N + 2.5\,\text{k})} \le 1.33(0.66)F_y \qquad \text{AISC-ASD, K1.3}$$

$$\frac{322 \text{ kips}}{(0.415)(29.8 + 2.5(1.375))} = 23.3 \text{ ksi} \le 1.33(0.66)(36 \text{ ksi}) = 31.6 \text{ ksi} \qquad o.k.$$

6f. **Gusset-to-column design.**

The gusset plate connection to the column is designed using the same procedure as the gusset-beam connection.

The weld length to the column is:

$$l_w = 2(9) = 18 \text{ in.}$$

Per inch of effective throat area, weld stresses are:

$$f_x = \frac{H_c}{2(l_w)} = \frac{135}{2(18)} = 3.75 \text{ ksi} \quad (x\text{-component})$$

$$f_y = \frac{V_c}{2(l_w)} = \frac{244}{2(18)} = 6.77 \text{ ksi} \quad (y\text{-component})$$

$$f_r = \sqrt{(3.75)^2 + (6.77)^2} = 7.75 \text{ ksi} \quad (\text{resultant})$$

Determine the required weld size, with the 1.4 factor to enhance ductility of the weld.

$$t_{weld} = 1.4\left[\frac{7.75 \text{ ksi}}{35.7(0.707)}\right] = 0.42 \text{ in.}$$

∴ ½-in. fillet weld *o.k.*

Check compressive stress in the web toe of the $W10\times54$ column:

$$\frac{R}{t(N+2.5k)}=\frac{135}{(0.37)(18+2.5(1.25))}=17.3\,\text{ksi}$$ AISC-ASD K1.3

$$1.33(0.66)(36\,\text{ksi})=31.6\,\text{ksi}>17.3\,\text{ksi}\qquad o.k.$$

6g. Beam-to-column connection.

The connection of the $W24$ beam to the $W10$ column must carry the dead and live loads on the beam as well as the vertical and horizontal components of the brace force transferred from the gusset plates to the top and bottom of the beam.

From the diagonal brace above the beam (see Figure 1A-19d), the connection forces to the beam are:

$$A_b+H_c=41+135=176\,\text{kips}$$

$$R_b=V_{DL}+V_{LL}=14.1+10.3=24.4\,\text{kips}$$

$$R_b+V_b=24.4+322=346\,\text{kips}$$

The diagonal brace below the beam also contributes to the beam-to-column connection forces. The horizontal component from the brace below (H_c) acts opposite to the brace above, while the vertical component (V_b) adds to that from the brace above. The connection forces above are based on the tensile capacity of the brace, so it is reasonable to use the compressive strength of the brace below.

Assuming a $\text{TS}8\times8\times5/8$-in. brace below:

$$P_{sc}=1.7(324)=551\,\text{kips}$$

$$\therefore V_b=322(551/800)=222\,\text{kips}$$

$$H_c=135(551/800)=93\,\text{kips}$$

The net beam-to-column connection forces (as shown in Figure 1A-19b) are:

$$A_b+H_c=176-93=83\,\text{kips}$$

$$R_b+V_b=346+222=568\,\text{kips}$$

Using an eccentricity of ± 3 inches:

$$M_{ecc} = (3)(568) = 1{,}704 \text{ kip-in.}$$

Try a single shear plate (A572 grade 50) with 2 rows of 7-1¼-inch diameter A490 SC bolts (14 bolts total) and a complete penetration weld from the shear tab to the column. Slip critical bolts are required for connections subject to load reversal per AISC. Check the plate and weld stresses with capacities per §2213.4.2. Assuming a plate thickness of 1-inch, stresses are:

Shear tab length = $6(3'') + 3'' = 21$ in.

$$f_x = \frac{83}{(21)(1)} = 3.95 \text{ ksi } (x\text{-component})$$

$$f_y = \frac{568}{(21)(1)} = 27.0 \text{ ksi } (y\text{-component})$$

$$Z_{plastic} = \frac{(21)^2}{4} = 110.3$$

$$f_{x \cdot x} = \frac{1{,}704}{110.3} = 15.4 \text{ ksi (rotation)}$$

$$f_r = \sqrt{(27.0)^2 + (3.95 + 15.4)^2} = 33.2 \text{ ksi (resultant)}$$

Required minimum plate thickness $(F_y = 50 \text{ ksi})$:

$$t_{PL} = \frac{f_r(1)}{F_y} = \frac{33.2}{50} = 0.66 \text{ in.}$$

Try ¾-in. shear tab with complete penetration weld to column. §2213.4.2

Check shear capacity of plate.

$$V_s = 0.55 F_y dt = 0.55(50)(21)(0.75) = 433 \text{ kips} < 568 \text{ kips} \quad \textit{no good}$$

Try 1-inch plate.

$$\text{Allowable } V_c = 433\left(\frac{1.0}{0.75}\right) = 577 \text{ kips} > 568 \text{ kips} \quad \textit{o.k.}$$

$\therefore$ Use 1-in. plate shear tab

Check shear plate net area for tension. §2213.9.3.2
§2213.8.3.2

$$\frac{A_e}{A_g} \geq \frac{1.2\alpha F^*}{F_u} \qquad (13\text{-}6)$$

where:

$$F^* = \frac{83}{(1.0)(21)} = 3.95\,\text{ksi}$$

$$\frac{1.2\alpha F^*}{F_u} = \frac{1.2(1.0)3.95}{65} = 0.073$$

$$A_e = 21(1.0) - 7(1.375)(1.0) = 11.38 \text{ in.}$$

$$\frac{A_e}{A_g} = \frac{11.38}{21.0} = 0.54 > 0.073 \qquad o.k.$$

Check bolt capacity for combined shear and tension.

Per bolt:

$$F_x = \frac{83}{14} = 5.9\,\text{kips}$$

$$F_y = \frac{568}{14} = 40.6\,\text{kips}$$

$$F_R = \sqrt{(5.9)^2 + (40.6)^2} = 41.0\,\text{kips}$$

For 1-1/4-in. diameter A490-SC bolts, the allowable shear bolt is:

$$V_{bolt} = 1.7(25.8) = 43.9\,\text{kips} > 41.0\,\text{kips} \qquad o.k.$$

$\therefore$ Use 1¼-inch A90-SC bolts

Commentary

As shown on the frame elevations (Figure 1A-4), a horizontal steel strut has been provided between the columns at the foundation. Welded shear studs are installed on this strut with the capacity to transfer the horizontal seismic force resisted by the frame onto the foundations, through grade beams or the slab-on-grade. This technique provides redundancy in the transfer of seismic shear to the base, and is recommended as an alternate to transferring the frame shear force solely through the anchor bolts.

References

AISC-ASD, 1989. *Manual of Steel Construction, Allowable Stress Design*. American Institute of Steel Construction, Chicago, Illinois. 9th Edition.

AISC/LRFD, 1994. *Manual of Steel Construction, Load and Resistance Factor Design*. Volumes I and II. American Institute of Steel Construction, Chicago, Illinois. 2nd Edition.

Astaneh-Asl, A., 1998. "Seismic Behavior and Design of Gusset Plates," *Steel-Tips*. Structural Steel Educational Council.

Cochran, Michael, 2000. "Design and Detailing of Steel SCBF Connections," *SEAONC Seminar Series*. Structural Engineers Association of California, Sacramento, California.

Hassan, O. and Goel, S., 1991. *Seismic Behavior and Design of Concentrically Braced Steel Structures*. Dept. of Civil Engineering, University of Michigan.

ICBO, 1998. Maps of Known Active Fault Near-Source Zones in California and Adjacent Portions of Nevada. International Conference of Building Officials, Whittier, California.

Lee, S. and Goel, S., 1987. *Seismic Behavior of Hollow and Concrete Filled Square Tubular Bracing Members*. Dept. of Civil Engineering, University of Michigan.

Sabelli, R., and Hohbach, D., 1999. "Design of Cross-Braced Frames for Predictable Buckling Behavior," *Journal of Structural Engineering*. American Society of Civil Engineers, Vol.125, no.2, February 1999.

Thornton, W., 1991. "On the Analysis and Design of Bracing Connections," *National Steel Conference Proceedings*. American Institute of Steel Construction, pp. 26.1-26.33 Chicago, Illinois.

Design Example 1B
Ordinary Concentric Braced Frame

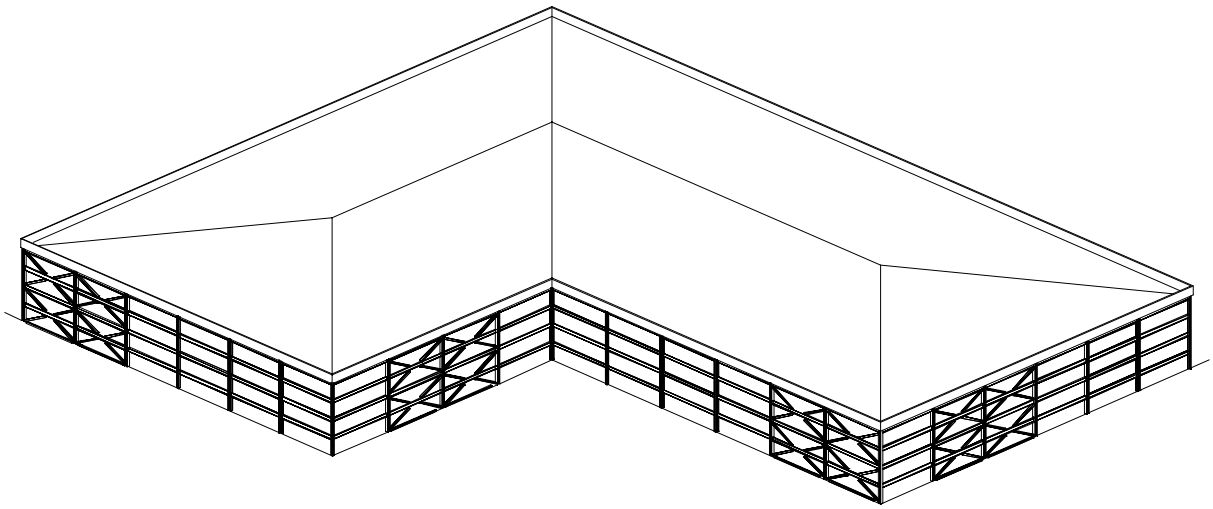

Figure 1B-1. Four-story steel frame office building with ordinary concentric braced frames (OCBF)

Overview

This Design Example illustrates the differences in design requirements for an ordinary concentric braced frame (OCBF) and a special concentric braced frame (SCBF) (illustrated in Design Example 1A). The same four-story steel frame structure from Example 1A is used in this Design Example (Figure 1B-1).

Building weights, dimensions, and site seismicity are the same as Example 1A.

Coefficients for seismic base shear are revised as required for the OCBF. The "typical design bay" is revised for the OCBF, and the results compared to those for the SCBF structure.

It is recommended that the reader first review Design Example 1A before reading this Design Example. Refer to Example 1A for plans and elevations of the structure (Figures 1A-1 through 1A-4).

In the Blue Book Commentary (C704.12), OCBFs are not recommended for areas of high seismicity or for essential facilities and special occupancy structures. SCBFs are preferred for those types of structures, since SCBFs are expected to perform better in a large earthquake due to their ductile design and detailing. OCBFs are considered more appropriate for use in one-story light-framed construction, non-building structures and in areas of low seismicity.

Outline

This Design Example illustrates the following parts of the design process:

1. **Design base shear.**
2. **Distribution of lateral forces.**
3. **Interstory drifts.**
4. **Braced frame member design.**
5. **Bracing connection design.**

Calculations and Discussion — Code Reference

1. Design base shear.

1a. Classify the structural system. §1629.6

The structure is a building frame system with lateral resistance provided by ordinary braced frames (System Type 2.4.a of Table 16-N). The seismic factors are:

$R = 5.6$

$\Omega = 2.2$

$h_{max} = 160\,\text{ft}$ Table 16-N

1b. **Select lateral force procedure.** **§1629.8.3**

The static lateral force procedure will be used, as permitted for irregular structures not more than five stories or 65 feet in height.

1c. **Determine seismic response coefficients.** **§1629.4.3**

For Zone 4 and Soil Profile Type S_D:

$$C_a = 0.44(N_a) = 0.44(1.0) = \underline{\underline{0.44}}$$ Table 16-Q

$$C_v = 0.64(N_v) = 0.64(1.08) = \underline{\underline{0.69}}$$ Table 16-R

1d. **Evaluate structure period T.**

From Design Example 1A:

$$T_B = \underline{\underline{0.57\,\text{sec}}}$$ §1630.2.2

1e. **Determine design base shear.** **§1630.2.1**

$$V = \frac{C_v I}{RT} W = \frac{0.69(1.0)}{5.6(0.57)} W = 0.216W \qquad (30\text{-}4)$$

Base shear need not exceed:

$$V = \frac{2.5 C_a I}{R} W = \frac{2.5(0.44)(1.0)}{5.6} = 0.196\,W \qquad (30\text{-}5)$$

For Zone 4, base shear shall not be less than:

$$V = \frac{0.8 Z N_v I}{R} W = \frac{0.8(0.4)(1.08)(1.0)}{5.6} = 0.062W \qquad (30\text{-}7)$$

Equation 30-5 governs base shear.

$$\therefore V = \underline{\underline{0.196W}}$$

1f. **Determine earthquake load combinations.** **§1630.1**

Reliability/redundancy factor $\rho = 2 - \dfrac{20}{r_{max}\sqrt{A_b}}$ (30-3)

From Design Example 1A, use $\rho = 1.0$.

For the load combinations of §1630.1:

$$E = \rho E_h + E_v = 1.0(V) \quad (30\text{-}1)$$

$$E_m = \Omega E_h = 2.2(V) \quad (30\text{-}2)$$

2. **Distribution of lateral forces.**

2a. **Building weights and mass distribution.**

The weight and mass distribution for the building is shown in Table 1B-1. These values are taken from Design Example 1A.

Table 1B-1. Mass properties summary

Level	*W (kips)*	*X_{cg} (ft)*	*Y_{cg} (ft)*	*M (kip·sec²/in.)*	*MMI* $(\text{kip}\cdot\text{sec}^2\cdot\text{in.})$
Roof	6,687	161.1	1,80.9	17.3	316,931
4th	6,840	161.1	1,80.9	17.7	324,183
3rd	6,840	161.1	1,80.9	17.7	324,183
2nd	6,840	161.1	1,80.9	17.7	324,183
Total	27,207			70.4	

2b. **Determine total base shear.**

As noted above, Equation (30.5) governs, and

$$V = 0.196W = 0.196(27207) = \underline{\underline{5{,}333\,\text{kips}}} \quad (30\text{-}5)$$

2c. **Determine vertical distribution of force.** **§1630.5**

For the Static lateral force procedure, vertical distribution of force to each level is applied as follows:

$$F_x = \frac{(V - F_t)W_x h_x}{\sum W_i h_i} = V\left(\frac{W_x h_x}{\sum W_i h_i}\right) \qquad (30\text{-}15)$$

Table 1B-2. Distribution of base shear

Level	w_x *(kips)*	h_x *(ft)*	$w_x h_x$ *(ft)*	$\frac{w_x h_x}{\Sigma w_x h_x}$	F_x *(kips)*	ΣV *(kips)*
Roof	6,687	62	414,594	0.39	2,064	
4th	6,840	47	321,480	0.30	1,600	2,064
3rd	6,840	32	218,880	0.20	1,090	3,665
2nd	6,840	17	116,280	0.11	579	4,754
Total	27,207		1,071,234	1.00	5,333	5,333

3. **Calculate interstory drift.**

3a. **Determine Δ_M.**

The maximum inelastic response displacement, Δ_M, is determined per §1630.9.2 as:

$$\Delta_M = 0.7(R)\Delta_S = 0.7(5.6)\Delta_S = 3.92\Delta_S \qquad (30\text{-}17)$$

3b. **Check story drift.**

The maximum interstory drift (obtained from a computer analysis and summarized in Table 1A-7 of Design Example 1A) occurs in the north-south direction at the second story, and is 0.36 inches with $R = 5.6$. This value must be adjusted for the $R = 6.2$ used for OCBF systems.

$$\Delta_S \text{ drift} = \left(\frac{6.2}{5.6}\right)(0.36'') = 0.40 \text{ in.}$$

$$\Delta_M \text{ drift} = 0.40(3.92) = 1.57 \text{ in.}$$

$$\text{Drift ratio} = \frac{1.57}{180} = 0.009 < 0.025 \quad o.k. \qquad 1630.10.2$$

Comment: The elastic story displacement is greater for the SCBF than the OCBF, but the maximum inelastic displacement (Δ_M) is equivalent to the SCBF. Drift limitations rarely, if ever, govern braced frame designs. And, as a design consideration, there is essentially no difference in the calculated maximum drifts for OCBFs and SCBFs.

4. Braced frame member design.

Braced frame member design will be done using the same typical design bay as shown in Example 1A. SCBF member seismic forces are increased proportionally for the OCBF using a ratio of the R values. Member axial forces and moments for dead load and seismic loads are shown below (Figure 1B-2). All steel framing is designed per Chapter 22, Division V, Allowable Stress Design. Requirements for braced frames, except SCBF and EBF, are given in §2213.8.

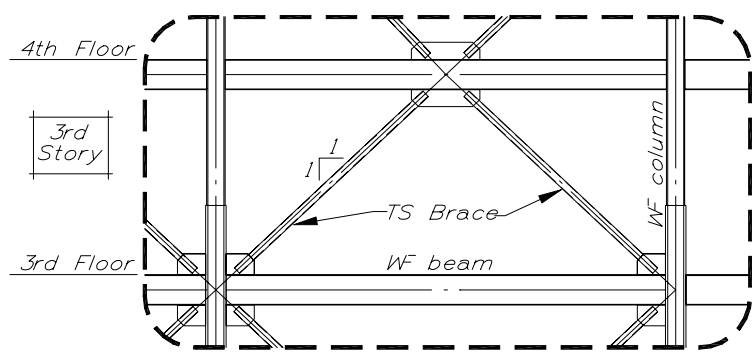

Figure 1B-2. Typical braced bay

TS brace @ 3rd story:

$$P_{DL} = 24 \text{ kips}$$

$$P_{LL} = 11 \text{kips}$$

$$P_E = 400 \text{kips}$$

WF beam @ 3rd floor:

$M_{DL} = 1600$ kip-in.

$M_{LL} = 1193$ kip-in.

$V_{DL} = 14.1$ kips

$V_{LL} = 10.3$ kips

$P_E = 83$ kips

WF column @ 3rd story:

$P_{DL} = 67$ kips

$P_{LL} = 30$ kips

$P_E = 130$ kips

$M_E \approx 0$

4a. **Diagonal brace design at the 3rd story.**

The basic ASD load combinations of §1612.3.1 with no one-third increase will be used.

$$D + \frac{E}{1.4}: \quad P_1 = 24 + \frac{400}{1.4} = 310 \text{ kips (compression)} \tag{12-9}$$

$$0.9D \pm \frac{E}{1.4}: \quad P_2 = 0.9(24) - \frac{400}{1.4} = -264 \text{ kips (tension)} \tag{12-10}$$

$$D + 0.75\left[L + \left(\frac{E}{1.4}\right)\right]: \quad P_3 = 24 + 0.75\left[11 + \frac{400}{1.4}\right] = 246 \text{ kips (compression)} \tag{12-11}$$

The compressive axial load of Equation (12-9) controls.

The unbraced length, l_w, of the TS brace is 18.5 feet.

The effective length $kl = 1.0(18.5) = 18.5$ feet.

Maximum slenderness ratio:

$$\frac{kl}{r} \le \frac{720}{\sqrt{F_y}}$$ §2213.8.2.1

For a tube section:

$$F_y = 46\,\text{ksi}$$

$$\therefore \frac{720}{\sqrt{46}} = 106$$

$$\text{Minimum } r = \frac{kl}{106} = \frac{12(18.5)}{106} = 2.09\,\text{in.}$$

$$\text{Maximum width-thickness ratio } \left(\frac{b}{t}\right) \le \frac{110}{\sqrt{F_y}} = 16.2$$ §2213.8.2.5

Try TS $10 \times 10 \times 5/8$.

$$r = 3.78 > 2.09'' \quad o.k.$$

$$\frac{b}{t} = \frac{10}{0.625} = 16.0 < 16.2 \quad o.k.$$

For an OCBF, the capacity of bracing members in compression must be reduced by the stress reduction factor "B" per §2213.8.2:

$$F_{as} = BF_a$$ (13-4)

$$B = 1/\{1 + [(K\,l/r)/(2C_c)]\}$$ (13-5)

where:

$$C_c = \sqrt{\frac{2\pi^2 E}{F_y}}$$ AISC-ASD §E2

$$(Kl)/r = \frac{1.0(12)(18.5)}{3.78} = 58.7$$

$$B = \frac{1}{1 + [58.7/2(111.6)]} = 0.79$$

For $kl = 18.5\,\text{ft}$

$P_{allow} = 482\,\text{kips}$ AISC-ASD, pp. 3-41

$P_{as} = (0.79)(482) = 380 > 310\,\text{kips} \quad o.k.$

$\therefore$ Use TS $10 \times 10 \times 5/8$

4b. **Girder design at the 3rd story.**

From a review of Design Example 1A, the vertical load moment governs the girder design. With only a nominal increase in axial force from seismic loading, the girder is okay by inspection.

4c. **Column design at the 3rd story.**

The columns will be designed using the basic ASD load combinations with no one-third increase.

$$D + L: \quad P_1 = 67 + 30 = 97\,\text{kips (compression)} \tag{12-8}$$

$$D + \frac{E}{1.4}: \quad P_1 = 67 + \frac{130}{1.4} = 160\,\text{kips (compression)} \tag{12-9}$$

$$0.9D \pm \frac{E}{1.4}: \quad P_2 = 0.9(67) - \frac{130}{1.4} = 33\,\text{kips (tension)} \tag{12-10}$$

$$D + 0.75\left[L + \left(\frac{E}{1.4}\right)\right]: \quad P_3 = 67 + 0.75\left[30 + \frac{130}{1.4}\right] = 159\,\text{kips (compression)} \tag{12-11}$$

For the columns, ASTM A36 steel with $F_y = 36\,\text{ksi}$. The unbraced column height is:

$h = 15 - 1 = 14\,\text{ft}$

Per AISC-ASD manual, p. 3-30, select a $W10 \times 49$ column with $kl = 14\,\text{ft}$.

$P_{allow} = 242 > 160\,\text{kips} \quad o.k.$ AISC-ASD pp. 3-30

$\therefore$ Use $W10 \times 49$ column

Note that without the local buckling compactness requirement of §2213.9.2.4, the $W10\times49$ works in the OCBF, where a $W10\times54$ is required for the SCBF of Example 1A. Also note that the special column strength requirements of §2213.5.1 do not apply to the OCBF. The relaxation of ductility requirements for the OCBF reflects lesser inelastic displacement capacity than the SCBF, hence the greater seismic design forces for the OCBF.

5. Braced connection design. §2213.8.3

The design provisions for OCBF connections are nearly identical to those for SCBF connections, with one significant difference. The SCBF requirements for gusset plates do not apply to OCBF connections. Therefore, the minimum "2*t*" setback, as shown in Figure 1A-19(a) of Design Example 1A for the SCBF, may be eliminated. This allows the end of the tube brace to extend closer to the beam-column intersection, thereby reducing the size of the gusset plate.

Under the requirements of §2213.8.3.1, the OCBF connections must be designed for the lesser of:

1. $P_{ST} = F_y A = 46(22.4) = 1030\,\text{kips}$ §2213.8.3.1

2. $P_M = P_D + P_L + \Omega_M P_E = (24+11) + 2.2(400) = 915\,\text{kips}$

3. Maximum force that can be transferred to brace by the system.

The remainder of the connection design follows the same procedure as for Design Example 1A, with all components designed for the $\underline{\underline{915\,\text{kip}}}$ force derived above.

Design Example 1C
Chevron Braced Frame

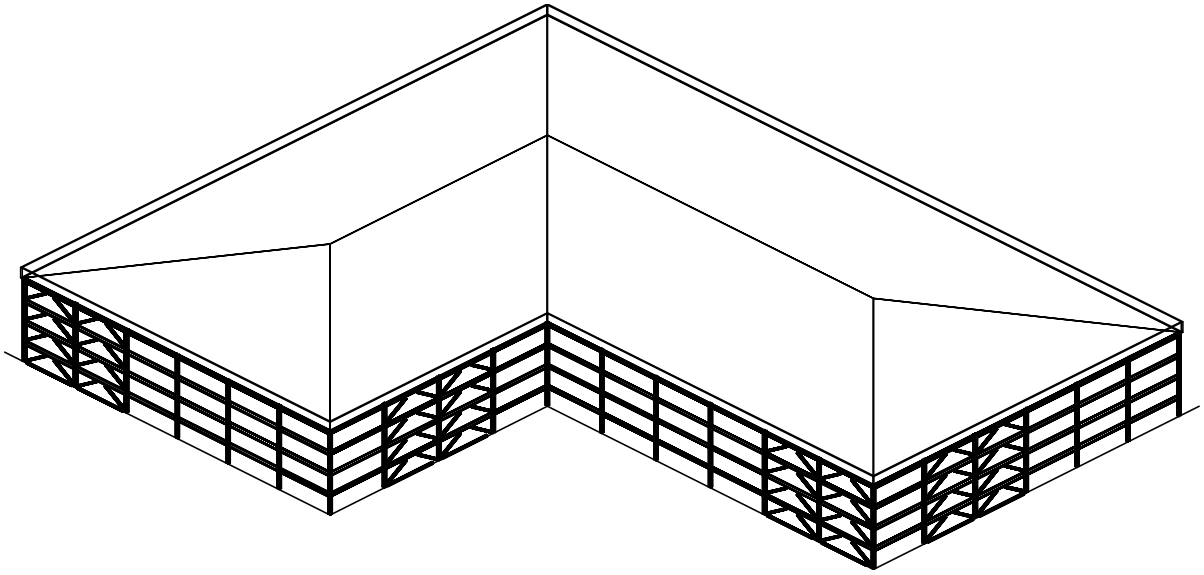

Figure 1C-1. Four-story steel frame office building with chevron braced frames

Overview

This Example illustrates the additional design requirements for *chevron bracing* designed as either an Ordinary Concentric Braced Frame (OCBF) or a Special Concentric Braced Frame (SCBF). The typical design bay from Design Example 1A is modified for use in this example. For comparison, the member forces are assumed to be the same as for Design Examples 1A and 1B. It is recommended that the reader first review Design Examples 1A and 1B before reading this example. Refer to Design Example 1A for plans and elevations of the structure (Figures 1A-1 through 1A-4).

Outline

This Design Example illustrates the following parts of the design process:

1. **Bracing configuration.**
2. **Chevron bracing design under OCBF requirements.**
3. **Chevron bracing design under SCBF requirements.**
4. **Brace to beam connection design.**

Calculations and Discussion *Code Reference*

1. Bracing configuration. §2213.2, 2213.8

Section 2213.2 defines chevron bracing as "…that form of bracing where a pair of braces located either above or below a beam terminates at a single point within the clear beam span." It also defines V-bracing and inverted V-bracing as chevron bracing occurring above or below the beam (Figure 1C-2).

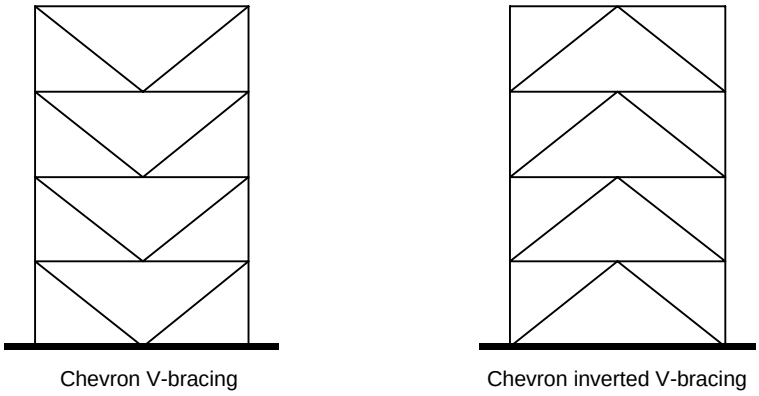

Figure 1C-2. Chevron bracing elevations

As discussed in the Blue Book Commentary §C704.9, the seismic performance of chevron braces can degrade under large cyclic displacements if the diagonals have poor post-buckling behavior. For this reason, the design force for chevron bracing in OCBF systems is increased so that the bracing members remain elastic during moderate earthquakes. Chevron bracing in SCBF systems has demonstrated enhanced post-buckling behavior, due to the additional design parameters placed

on SCBF members and connections. Chevron braces designed to SCBF requirements are therefore not subject to the load amplification factor (§2213.8.4.1, Item 1) imposed on chevron braces in OCBF systems.

Recognizing that the buckling capacity of the compression diagonals is critical to all forms of braced frame performance, §2213.8.2.3 requires that no more than 70 percent of the diagonals act in compression along any line of bracing. By providing some balance in the distribution of tension and compression diagonals, ultimate inelastic story drifts are compatible for both directions.

The typical design bay from Design Example 1A is re-configured for chevron inverted V-bracing, as shown below in Figure 1C-3.

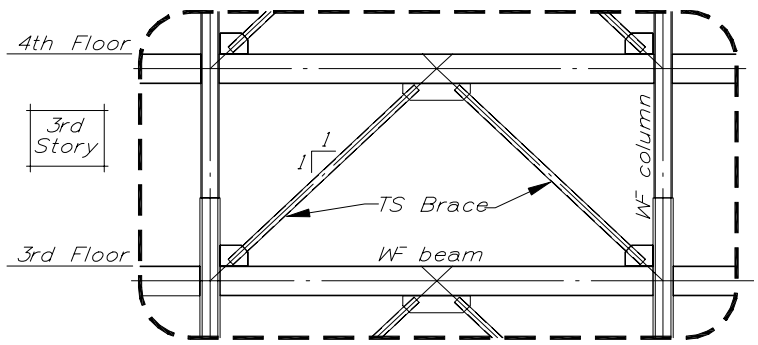

Figure 1C-3. Typical chevron braced bay under OCBF requirements

2. Chevron bracing design under OCBF requirements.

For comparison, assume the forces to the diagonal bracing members are the same as for Example 1B:

TS brace @ 3rd story:

$$P_{DL} = 24\,\text{kips}$$

$$P_{LL} = 11\,\text{kips}$$

$$P_E = 400\,\text{kips}$$

For OCBF chevron bracing, §2213.8.4.1 requires that the seismic force be increased by a factor of 1.5:

$$P_E = 1.5(400) = 600\,\text{kips} \qquad \text{§2213.8.4}$$

Also note that the same section requires the beam to be continuous between columns, and that the beam be capable of supporting gravity loads without support from the diagonal braces. From Design Example 1A, the $W24\times68$ girder satisfies these conditions.

For the diagonal brace at the third story, we have the following basic ASD load combinations with no one-third increase:

$$D + \frac{E}{1.4}:\ P_1 = 24 + \frac{600}{1.4} = 453\,\text{kips (compression)} \qquad (12\text{-}9)$$

$$0.9D \pm \frac{E}{1.4}:\ P_2 = 0.9(24) - \frac{600}{1.4} = -407\,\text{kips (tension)} \qquad (12\text{-}10)$$

$$D + 0.75\left[L + \left(\frac{E}{1.4}\right)\right]:\ P_3 = 24 + 0.75\left[11 + \frac{600}{1.4}\right] = 354\,\text{kips (compression)} \qquad (12\text{-}11)$$

The compressive axial load of Equation (12-9) controls.

From Design Example 1B, the capacity of a TS $10\times10\times5/8$ tube section, adjusted by the stress reduction factor (B) of §2213.8.2.2 is:

$$P_{as} = 342\,\text{kips} < 453\,\text{kips} \qquad n.g. \qquad \text{§2213.8.2.5}$$

The TS $10\times10\times5/8$ is the largest section that satisfies the width-thickness ratio for tubes as required by §2213.8.2.5. A wide flange section using A572 grade. 50 steel $(F_y = 50\,\text{ksi})$ will be required in lieu of a tube section.

Effective length @ centerline: $kl = 1.0(18.5) = 18.5\,\text{ft}$ §2213.8.2.1

Maximum slenderness ratio: $\dfrac{kl}{r} \le \dfrac{720}{\sqrt{F_y}}$

For $F_y = 50\,\text{ksi}$; $\dfrac{720}{\sqrt{50}} = 102$

$$\therefore \text{ Minimum } r = \frac{kl}{102} = \frac{12(18.5)}{102} = 2.18 \text{ in.}$$

Maximum width-thickness ratio $\left(\frac{b_f}{2t}\right) \leq \frac{65}{\sqrt{F_y}} = 9.2$ AISC-ASD, Table B5.1

Try $W12\times120$ brace:

$r_y = 3.13 > 2.18$ in. *o.k.*

$\frac{b_f}{2t} = 5.6 < 9.2$ *o.k.*

Stress reduction factor: §2213.8.2.2

$$P_{as} = BP_a \quad (13\text{-}4)$$

$$B = 1/\{1+[(kl/r)/2C_c]\} \quad (13\text{-}5)$$

$$kl/r_y = \frac{1.0(12)(18.5)}{3.13} = 70.9$$

$$B = \frac{1}{1+[70.9/2(107)]} = 0.75$$

For $kl = 18.5$

$P_a = 733$ kips AISC-ASD, pp. 3-27

$P_{as} = (0.75)(733) = 550 > 453$ kips *o.k.*

$\therefore$ Use $W12\times120$ brace member

3. **Chevron bracing design under SCBF requirements.** **§2213.9.4.1**

For SCBF chevron bracing, §2213.9.4.1 does not require the seismic force to be increased by a factor of 1.5 as is required for OCBF chevron braces. This provision is waived for SCBF chevron bracing due to an additional requirement for beam design. As for OCBF braces, §2213.9.4.1 also requires the beam to be continuous between columns, and that the beam be capable of supporting gravity loads without support from the diagonal braces. Additionally, for special chevron bracing, the beam intersected by chevron braces is to have sufficient strength to resist gravity loads combined with *unbalanced* brace forces. This requirement

provides for overall frame stability, and enhanced post-buckling behavior, with reduced contribution from the buckled compression bracing members.

For comparison, assume the member forces remain the same as for Design Example 1A.

TS brace @ 3rd story:

$$P_{DL} = 24\,\text{kips}$$

$$P_{LL} = 11\,\text{kips}$$

$$P_E = 348\,\text{kips}$$

WF beam @ 3rd story:

$$M_{DL} = 1{,}600\,\text{kip-in.}$$

$$M_{LL} = 1{,}193\,\text{kip-in.}$$

$$V_{DL} = 14.1\,\text{kips}$$

$$V_{LL} = 72\,\text{kips}$$

$$P_E = 72\,\text{kips}$$

3a. **Diagonal brace design.**

The diagonal brace design for the SCBF chevron brace remains the same as that of the two-story X-brace presented in Design Example 1A.

$\therefore$ Use TS $8\times8\times5/8$ brace member

3b. **Beam design at the 3rd floor.**

As demonstrated in Design Example 1A, the $W24\times68$ beam satisfies the basic load combinations of §1612.3.1. However, the unbalanced brace force specified in §2213.9.4.1 imposes a severe mid-span point load to the beam. Using a TS $8\times8\times5/8$ section, the brace forces are as follows:

$$P_{st} = A(F_y) = 17.4(46) = 800.4\,\text{kips}$$

$$P_{sc} = 1.7P_{allow} = 1.7(324) = 551\,\text{kips}$$

The maximum unbalanced brace force P_b is taken as the net difference of the vertical components of P_{st} and $0.3P_{sc}$ as show in Figure 1C-4. §2213.9.4.1

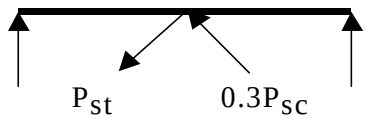

Figure 1C-4. Unbalanced chevron brace forces

$$P_b = 0.707[800.4 - 0.3(551)] = 449 \text{ kips}$$

$$M_b = P_b\, L/4 = 449(12)(30)/4 = 40{,}410 \text{ kip-in.}$$

The beam must have the strength to resist load combinations similar to the Special Seismic Combinations of §1612.4:

$$1.2D + 0.5L + P_b$$ §2213.9.4.1, Item 3

$$M_{max} = 1.2(1{,}600) + 0.5(,1193) + 40{,}410 = 42{,}927 \text{ kip-in.}$$

$$0.9D - P_b$$

$$M_{min} = 0.9(1600) - 40410 = -38970 \text{ kip} - \text{in.}$$

Neglecting consideration of composite beam action, and using the flexural strength, the minimum required plastic modulus Z is solved below (using A572 grade 50 steel).

$$M_s = Z(F_y) > M_{max}$$

$$\therefore \quad Z_{reqd} \geq 42927/50 = 859 \text{ in.}^3$$

Try $W36 \times 232$

$$Z = 936 \text{ in.}^3 > 859 \text{ in.}^3 \qquad o.k.$$

$\therefore$ Use $W36 \times 232$ beam

To complete the beam design, the beam-to-column connection should be checked for the reaction from vertical load plus $(P_b/2)$.

Comment: From the foregoing examples in Parts 2 and 3, it is apparent that compared to X-bracing, chevron bracing will require a substantial increase in member sizes. For the OCBF chevron-braced system, the brace size will increase, possibly resulting in larger demands at the connections. For the SCBF chevron bracing, the beam size increases to provide the capacity to meet the strength demand imposed by the unbalanced, post-buckling brace forces. Given their superior cyclic performance, it is recommended that SCBF chevron bracing be used in regions of moderate to high seismicity.

4. Brace to beam connection design. §2213.9.3.1

The brace to beam connection is shown in Figure 1C-5 below. This Example uses the SCBF bracing and forces. The design for the OCBF connection is similar, without the 2*t* setback between the end of the brace and the line of restraint for the gusset plate, as required for SCBF systems.

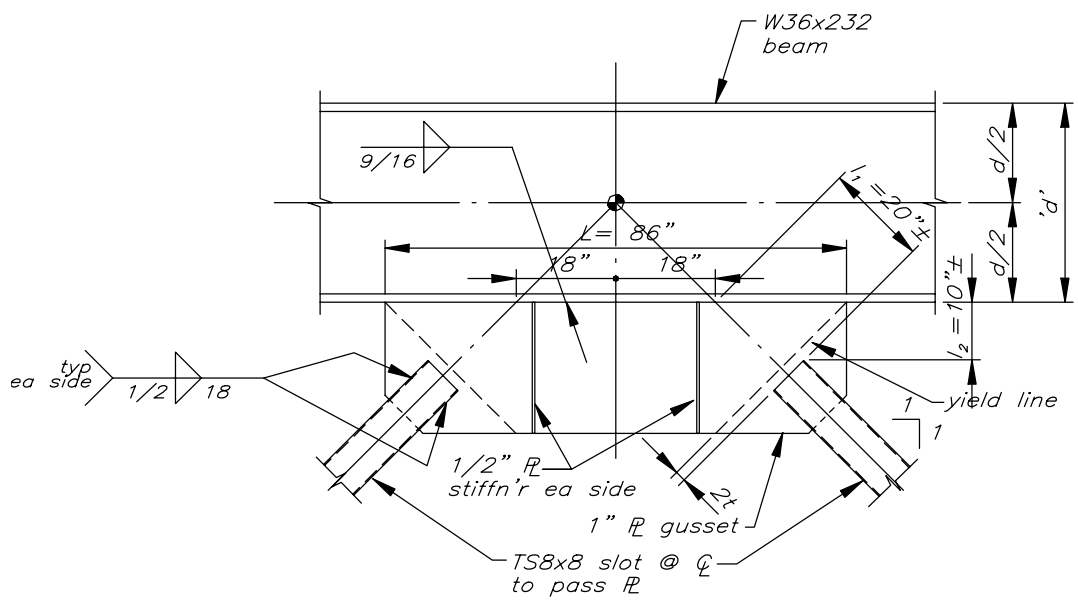

Figure 1C-5. Chevron brace-to-beam connection

4a. **Gusset plate design.**

From Design Example 1A, the TS $8\times8\times5/8$ brace strength is used for connection design. The brace-to-gusset design is as given in Part 6d of Design Example 1A:

Connection force:

$$P_{st} = A(F_y) = 800.4\,\text{kips}$$

Brace weld to gusset:

18" of ½" fillet weld each side each face

Gusset plate thickness:

1" plate gusset minimum

The gusset plate is also checked for shear and bending at the interface with the beam. From Figure 1C-5 we determine the plate length to be 86 inches.

Check plate shear stress:

$$V_{Plate} = \frac{2(800.4)}{\sqrt{2}} = 1{,}132\,\text{kips}$$

$$f_v = \frac{1{,}132\,\text{kips}}{1.0(86\,\text{in.})} = 13.1\,\text{ksi}$$

$$\text{Allow } F_v = 0.55F_y = 0.55(36) = 19.8\,\text{ksi} \qquad o.k.$$ §2213.4.2

Check plate bending stress.

From Figure 1-4, use an assumed moment couple length as distance between intersections of brace centerlines with beam flange.

$$M_{plate} = \frac{2(18)(800.4)}{\sqrt{2}} = 20{,}375\,\text{kip-in.}$$

$$Z = \frac{1.0(86)^2}{4} = 1{,}849\,\text{in.}^4$$

$$f_b = \frac{20{,}375}{1{,}849} = 11.0\,\text{ksi}$$

The allowable compressive bending stress is governed by the unsupported plate length perpendicular to the beam. From Figure 1C-5:

$l_2 = 10''$ and assume $k = 1.2$

$$\frac{kl}{r} = \frac{1.2(10)}{0.29(1.0)} = 41.4$$ AISC-ASD, Table C-36

$\therefore \; F_a = 19.08\,\text{ksi}$

Allowable $F_{sc} = 1.7(F_a) = 1.7(19.08) = 32.4\,\text{ksi} > 11.0\,\text{ksi}$ *o.k.*

$\therefore$ Use 1-inch plate gusset

4b. **Gusset to beam design.**

Length of weld to beam is $l_w = 86$ inches. Minimum fillet weld for 1-inch plate is 5/16-inch. Per inch of effective throat area, weld stresses are:

$$f_x = \frac{V}{2(l_w)} = \frac{1{,}132}{2(86)} = 6.58\,\text{ksi} \;\; \text{(x-axis)}$$

$$f_y = \frac{M}{S_w} = \frac{20{,}375(6)}{2(86)^2} = 8.26\,\text{ksi} \;\; \text{(y-axis)}$$

$$f_r = \sqrt{(6.58)^2 + (8.26)^2} = 10.56\,\text{ksi} \;\; \text{(resultant)}$$

Allow $F_w = 1.7(0.3)70 = 35.7\,\text{ksi}$ §2213.4.2

Required weld size: $t_w = \dfrac{10.56}{0.707(35.7)} = 0.41\text{in.}$

$\therefore$ Use 1/2-inch fillet weld each side plate

Commentary

The Blue Book Commentary warns that even with the strong-beam SCBF chevron, configurations may be susceptible to large inelastic displacements and P-delta effects. To mitigate these effects, chevron configurations that use two-story X-bracing or zipper columns are recommended. These bracing configurations are presented in the section Factors That Influence Design at the beginning of Design Example 1A.

Design Example 2
Eccentric Braced Frame

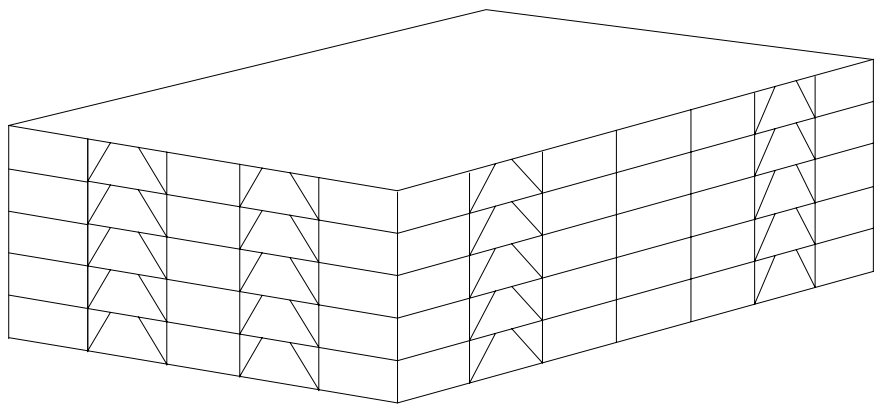

Figure 2-1. Eccentric braced frame (EBF) building

Overview

Use of eccentric braced frames (EBFs) in steel frame buildings in high seismic regions is a fairly recent development. This system was introduced in the 1988 UBC. While the concept has been thoroughly tested in laboratories, it has not yet been extensively tested in actual earthquakes. Many structural engineers, however, feel that it offers superior earthquake resistance. Following the problems with steel moment frame connections in the 1994 Northridge earthquake, many buildings that previously would have been designed as SMRF structures are now being designed with EBF systems.

Eccentric braced frames may be configured with several geometric patterns, including centrally located links (as chosen in this problem) or with links located adjacent to columns. When links are located adjacent to columns, a seismic SMRF connection is required at the link beam/column intersection. Several papers and many practitioners recommend that configurations using centrally located links be chosen to avoid the use of link beam/column SMRF connections, which increase the risk of brittle failure. Braces may be oriented to slope up to central link beams (inverted “V” braces) or down (“V” braces) to central link beams. Also, a two-story frame section can be designed with upper and lower braces meeting at a common link beam located between the two levels.

It is also desirable to prevent single-story yield mechanisms. Some options for this include using inverted braces at two levels with common link beams, which ensures two story yield mechanisms, or zipper columns at either side of link beams, extending from the second level to the roof, which ensures multi-story mechanisms.

In this Design Example, the five-story steel frame building shown schematically in Figure 2-1 is to have eccentric braced frames for its lateral force resisting system. The floor and roof diaphragms consist of lightweight concrete fill over steel decking. A typical floor/roof plan for the building is shown in Figure 2-2. A typical EBF frame elevation is shown in Figure 2-3.

The typical frame is designed in both allowable stress design (ASD) and load and resistance factor design (LRFD) because the code allows a designer the choice of either design method. The LRFD method is from the 1997 AISC-Seismic, which is considered by SEAOC to be the most current EBF design method. The ASD method has been in the UBC for several cycles and is considered to be older, not updated, code methodology.

Outline

This Design Example illustrates the following parts of the design process.

1. **Design base shear coefficient.**
2. **Reliability/redundancy factor.**
3. **Design base shear and vertical distribution of shear.**
4. **Horizontal distribution of shear.**
5. **EBF member design using allowable stress design (ASD).**
6. **EBF member design using load and resistance factor design (LRFD).**
7. **Typical EBF details.**

Note: Many calculations in this Design Example were performed using a spreadsheet program. Spreadsheet programs carry numbers and calculations to ten significant figures of accuracy, and thus will have round off errors when compared to hand calculations with two or three significant figures. The round off errors are usually within a percent or two. The reader should keep this in mind when comparing tables and calculations performed by hand.

Given Information

Roof weights:	
Roofing	6.0 psf
Insulation	3.0
Steel deck and fill	47.0
Roof framing	8.0
Partition walls (10 psf)	5.0 seismic
Ceiling	3.0
Mechanical/electrical	2.0
Total	74.0 psf
Live load:	20.0 psf

Floor weights:	
Floor covering	1.0 psf
Steel deck and fill	47.0
Framing (beams and columns)	13.0
Partition walls	10.0
Ceiling	3.0
Mechanical/electrical	2.0
Total	76.0 psf
Live load:	50.0 psf

Exterior curtain wall, steel studs, gypsum board, EIFS skin, weight: 20.0 psf

Structural materials:

Wide flange shapes and plates	ASTM A572, Grade 50 $(F_y = 50\,\text{ksi})$
Weld electrodes	E70XX
Light weight concrete fill	$f_c' = 3{,}000\,\text{psi}$

Seismic and site data:

Z = 0.4 (Seismic Zone 4)	Table 16-I
I = 1.0 (standard occupancy)	Table 16-K
Seismic Source Type = A	
Distance to seismic source = 5 km	
Soil profile type $= S_D$	

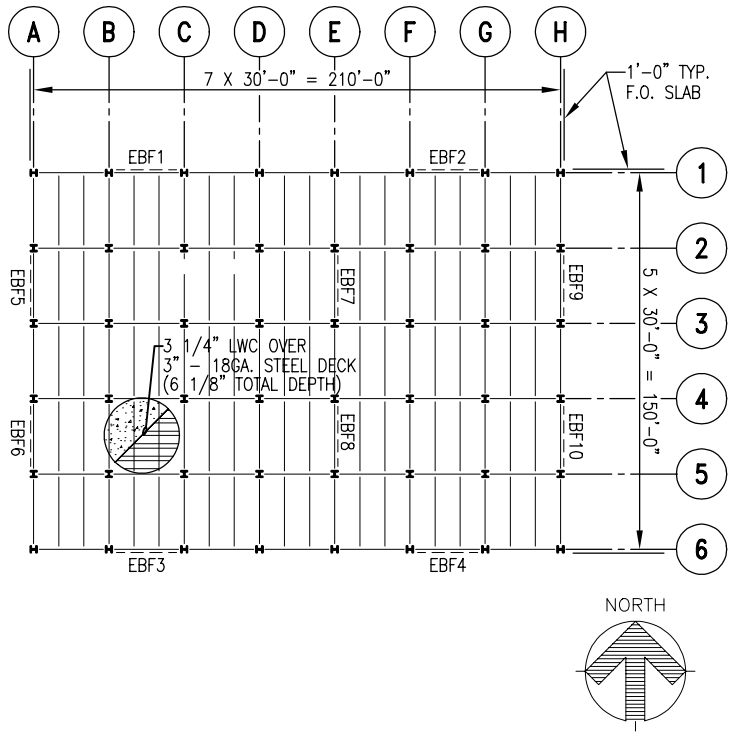

Figure 2-2. Typical floor and roof framing plan

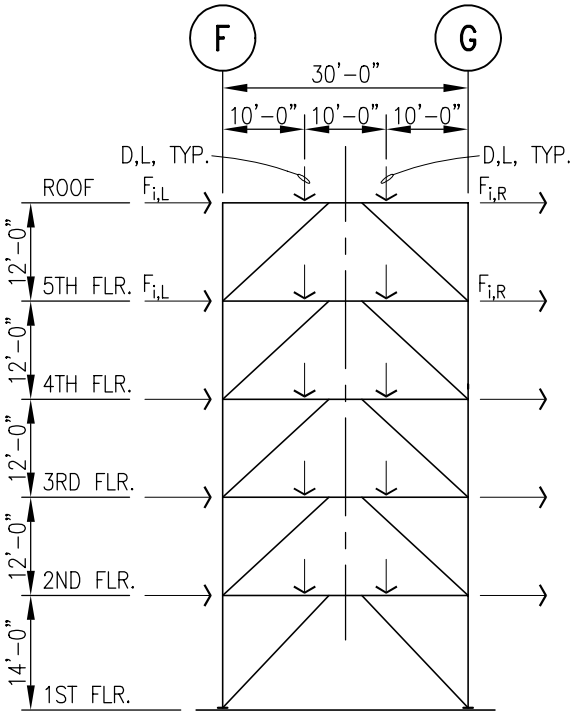

Figure 2-3. Typical frame elevation at frame EBF4

Calculations and Discussion	Code Reference

1. Design base shear coefficient. **§1630.2**

The static force procedure will be used and the building period is calculated using Method A. §1630.2.2

$$T = C_t (h_n)^{3/4} = .030(62)^{3/4} = .66\,\text{sec} \qquad (30\text{-}8)$$

Near source factors for seismic source type A and distance to source of 5 km are:

$N_a = 1.2$ Table 16-S

$N_v = 1.6$ Table 16-T

Seismic coefficients for Zone 4 and soil profile type S_D are:

$C_a = 0.44\ N_a = 0.44(1.2) = 0.53$ Table 16-Q

$C_v = 0.64\ N_v = 0.64(1.6) = 1.02$ Table 16-R

R coefficient for a steel frame building with eccentric braced frames:

$R = 7.0$, height limit is 240 feet Table 16-N

Calculation of design base shear: §1630.2.1

$$V = \frac{C_v I}{RT} W = \frac{1.02(1.0)}{7(0.66)} W = 0.22W \qquad (30\text{-}4)$$

but need not exceed:

$$V = \frac{2.5 C_a I}{R} W = \frac{2.5(.53)(1.0)}{7} W = 0.189W \qquad (30\text{-}5)$$

The total design shear shall not be less than:

$$V = 0.11 C_a I W = 0.11(.53)(1.0)W = 0.058W \qquad (30\text{-}6)$$

In addition, for Seismic Zone 4, the total base shear shall also not be less than:

$$V = \frac{0.8ZN_vI}{R}W = \frac{0.8(0.4)(1.6)(1.0)}{7}W = 0.073W \qquad (30\text{-}7)$$

Therefore, Equation (30-5) controls the base shear calculation.

$$\therefore V = \underline{\underline{0.189W}}$$

2. Reliability/redundancy factor. §1630.1.1

The reliability/redundancy factor Δ must be estimated. The factor was added to the code to penalize non-redundant systems. It varies from a minimum of 1.0 to a maximum of 1.5. It is determined for each principal direction. Since the building in this Design Example has four frames in the east-west direction, Δ is determined based on eight braces (two per frame) and a maximum torsional contribution of 2 percent (thus 1.02). The assumption is that all frames will be identical and that the horizontal component carried by each brace is equal. This assumption can be checked after final analysis. However, in this analysis it is determined without a structural analysis.

$$\rho = 2 - \frac{20}{r_{max}\sqrt{A_B}} \qquad (30\text{-}3)$$

$$A_B = 212' \times 15' = 32{,}224\,\text{ft}^2$$

$$r_{max} = \frac{1}{8(1.02)} = 0.128 \quad \text{(8 braces, 2 percent from torsion)}$$

$$1.0 \le \rho \le 1.5 \qquad \S 1630.1.1$$

$$\rho = 2 - \frac{20}{.128\sqrt{32{,}224}} = 1.13 \qquad (30\text{-}3)$$

$\therefore \rho = \underline{\underline{1.13}}$ for east-west direction

$\rho = \underline{\underline{1.0}}$ for north-south direction

3. Design base shear and the vertical distribution of shear. §1630.5

The floor area at each level is 32,224 square feet. The perimeter of the exterior curtain wall is 728 feet. The roof parapet height is 4 feet. Assume that the curtain wall weights distribute to each floor by tributary height.

The building mass calculation is shown in Table 2-1.

Table 2-1. Building mass calculation

Level	*Floor area (sf)*	w_i *(psf)*	$W_{r/f}$ *(kips)*	*Length exterior walls (ft)*	*h Walls (ft)*	w_i *Walls (psf)*	*W Walls (kips)*	W_i *(kips)*
Roof	32,224	74	2,385	728	10	20	146	2,530
5	32,224	76	2,449	728	12	20	175	2,624
4	32,224	76	2,449	728	12	20	175	2,624
3	32,224	76	2,449	728	12	20	175	2,624
2	32,224	76	2,449	728	13	20	11	2,660
Totals	161,120		12,181				871	13,062

3a. Design base shear. §1630.2.1

Using the design base shear coefficient from Part 1, the base shear for the east-west direction is

$$V = 1.13 \times 0.189W = 1.13 \times 0.189(12900) = \underline{\underline{2{,}789}}\,\text{k}$$

3b. Vertical distribution of shear. §1630.5

The total lateral force (i.e., design base shear) is distributed over the height of the building in accordance with §1630.5. The following equations apply:

$$V = F_t + \sum_{i=1}^{n} F_i \tag{30-13}$$

$$F_t = 0.07TV \le 0.25V \tag{30-14}$$

$F_t = 0$ for $T \le 0.7\,\text{sec}$, $T = 0.66\,\text{sec}$ for this Design Example

$$F_x = \frac{(V - F_t)w_x h_x}{\sum w_x h_x} \tag{30-15}$$

Using the building mass tabulated in Table 2-1 above, the vertical distribution of shear is determined as shown in Table 2-2 below.

Table 2-2. Vertical distribution of shear

Level	w_x (k)	w (k)	h_x (ft)	h (ft)	$w_x h_x$ (k-ft)	$\frac{w_x h_x}{\Sigma w_i h_i}$ (%)	F_x (k)	ΣV_l (k)
R	2,530	2,530	62	12	156,871	32	887	887
5	2,624	5,154	50	12	131,187	27	742	1,629
4	2,624	7,778	38	12	99,702	20	564	2,193
3	2,624	10,401	26	12	68,217	14	386	2,598
2	2,660	13,062	14	14	37,242	7	211	,789
Totals	13,062				493,220	100	2,789	2

4. Horizontal distribution of shear. §1630.6

Although the centers of mass and rigidity coincide, §1630.6 requires designing for an additional torsional eccentricity, e, equal to 5 percent of the building dimension perpendicular to the direction of force regardless of the relative location of the centers of mass and rigidity.

$$e_{ew} = (0.05)(150) = 7.5\,\text{ft} \text{ for east-west direction}$$

$$e_{ns} = (0.05)(210) = 10.5\,\text{ft} \text{ for north-south direction}$$

Assume that all frames have the same rigidity, since all are similar EBFs. This assumption can be refined in a subsequent analysis, after members have been sized and an elastic deflection analysis has been completed. Many designers estimate the torsional contribution for a symmetric building by adding 5 percent to 10 percent to the element forces. However, in this Design Example the numerical application of the code provisions will be shown.

Assume $R_1 = R_2 = ...R_{14} = 1.0$, where R_i is the rigidity of each EBF frame.

The calculation of direct shear plus torsion for a given frame is based on the following formula:

$$V_i = R_i\left(\frac{V_i}{\sum R}\right) \pm R_i\left(\frac{V_i ec}{\sum R_{xy} c^2}\right)$$

Table 2-3 gives the distribution of direct shear and torsional shear components as percentages of shear force (based on geometry).

Table 2-3. Calculation of direct shear plus torsion as percentage of story shear

Frame ID	X(ft) (1)	Y(ft) (1)	R_i	XR_i	YR_i	X^2R_i	Y^2R_i	$J = \Sigma Rd^2$	V_i/V_y (2)	T_x (%) (3)	Sum V_I (%) (2)	V_i/V_y (%)	T_y (%) (3)	Sum V_i
Longitudinal														
1		75	1		-75		5,625		25%	-0.84%	25.00%		-1.18%	
2		75	1		-75		5,625		25%	-0.84%	25.00%		-1.18%	
3		75	1		75		5,625		25%	0.84%	25.84%		1.18%	
4		75	1		75		5,625		25%	0.84%	25.84%		1.18%	
Transverse														
5	-110		1	-110		12,100				-1.23%		16.7%	-1.73%	16.7%
6	-110		1	-110		12,100				-1.23%		16.7%	-1.73%	16.7%
7	10		1	10		100				0.11%		16.7%	0.16%	16.9%
8	10		1	10		100				0.11%		16.7%	0.16%	16.9%
9	100		1	100		10,000				1.12%		16.7%	1.57%	18.3%
10	100		1	100		10,000				1.12%		16.7%	1.57%	18.3%
Totals								66,900(4)	100%	0%		100%	0%	

Notes:

1. X and Y are distances from the center of mass (i.e., the center of the building) to frames in the X and Y directions, respectively.
2. V_x and V_y are direct shears on frames in the X and Y directions, respectively.
3. T_x and T_y are shear forces on frames that resist torsional moments on the building. These shear forces are either in the X or Y directions and can be additive or subtractive with direct shear forces.
4. $\sum Rd^2 = \sum x^2 R_i + \sum y^2 R_i$

Based on the direct and torsional shear values tabulated in Table 2-3, and on the vertical distribution of shear tabulated in Table 2-2, the story forces to be used for design of the typical eccentric braced frame (EBF4) are as follows:

Table 2-4. Story shear forces for design of frame EBF4

Frame ID	Level	Story V_X (kips)	Story T_X (ft-kips)	Frame V_4 (kips)	Frame T_4 (kips)	$V_{i,6}$ (kips)	Story $F_{X,4}$ (kips)
4	R	887	6,653	222	7	229	229
4	5	1,629	12,217	407	14	421	192
4	4	2,193	16,445	548	18	567	146
4	3	2,578	19,338	645	22	666	99
4	2	2,789	20,918	697	23	721	55

5. EBF member design using (ASD).

In the 1997 UBC, a designer has a choice of whether to design using allowable stress design (ASD) methods or whether to use load and resistance factor design (LRFD) methods. In part 5, the ASD method is illustrated. In part 6, the LRFD method is illustrated. The results are slightly different, depending on the method chosen.

5a. Seismic forces for initial member design. §2213.10

Seismic forces on a typical EBF, in this case EBF4 on line 6, will be determined. The forces E, applied to EBF4 are calculated first by determining the seismic load along line 6. The unit shear load along line 6, v_{i6}, is thus $V_{i6}/210$ feet.

Frame EBF4 has a tributary collector length of 210 feet / 2 = 105 feet, and tributary lengths on the west side of the frame of 60 feet and on the east side of the frame of 45 feet. The frame forces are thus $F_{4iL} = v_{i6}$ (60 feet) and $F_{4iR} = v_{i6}$ (45 feet). The compression force in the link is equal to half the story shear tributary to the frame, minus the frame force at the right side $(F_{4iL} + F_{4iR})/2 - F_{4iR}$. Table 2-5 summarizes the forces at each level of frame EBF4.

Table 2-5. Axial forces through shear links on frame EBF4

Level	Frame $F_{x,4}$ (kips)	Line 6 V_{i4} (klf)	F_{xiL} (west) (kips)	F_{xiR} (east) (kips)	$C = T$ (link) (kips)
R	229	2.18	131.0	98.2	16.4
5	192	1.83	109.5	82.1	13.7
4	146	1.39	83.2	62.4	10.4
3	100	0.95	57.0	42.7	7.1
2	54	0.51	31.1	23.3	3.9

5b. Link length.

The inelastic behavior of a link is influenced by its length, e. The shorter the link length, the greater the influence of shear forces on the inelastic performance. Shear yielding tends to occur uniformly along the link length. Shear yielding of short links is very ductile with an inelastic capacity in excess of that predicted by calculations.

The following is a summary of link behavior as a function of the link length e. M_S is the flexural strength of the link and V_S is the shear strength. Both are defined in §2213.4.2.

$1.0\dfrac{M_S}{V_S} \le e \le 1.3\dfrac{M_S}{V_S}$	Ensures shear behavior and is the recommended upper limit for shear links. Links less than 1.0 M_s/V_s the link may not yield as expected.
$e \le 1.6\dfrac{M_S}{V_S}$	Elastic behavior is controlled by shear behavior, however, region is transition between shear governed behavior and bending governed behavior.
$e > 2.0\dfrac{M_S}{V_S}$	Link behavior is theoretically balanced between shear and flexural yielding.
$e \ge 3.0\dfrac{M_S}{V_S}$	Elastic deformation is controlled by flexural yielding.

The shorter the link length, the stiffer the EBF frame will be; however, the greater the link rotation. The code sets limits on link plastic rotation of 0.090 radians (ASD) and 0.080 radians (LRFD) due to Δ_m deflections. For most designs, link lengths of 1.0 to 1.3 M_s/V_s work well.

5c. Preliminary EBF frame member sizes.

Preliminary sizes of the EBF frame beams are determined by calculating the required shear area (dt_w) due to the story forces and frame geometry. The load combinations for allowable stress design procedures are given in Equations (12-7) through (12-11) or (12-12) through (12-16) in §1612.3. These load combinations use load values of $E/1.4$ to account for allowable stress design.

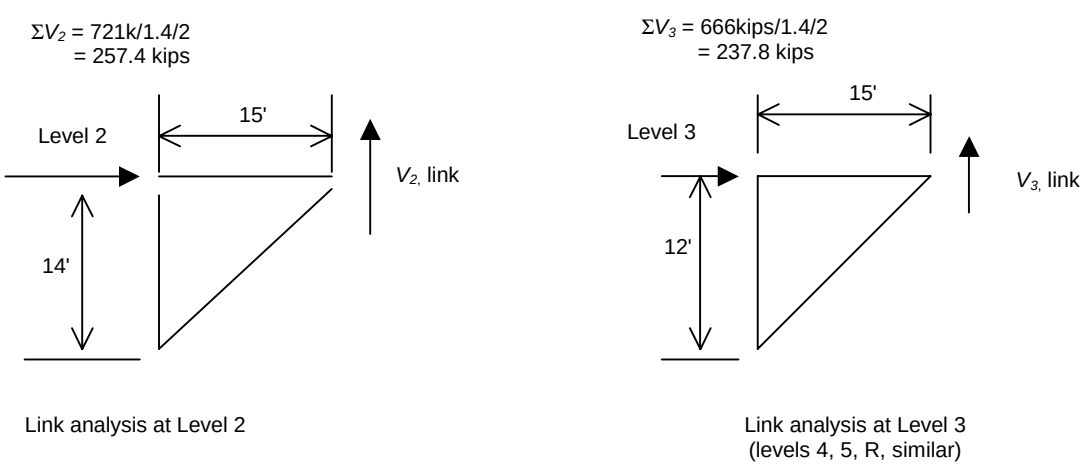

Figure 2-4. Preliminary link analysis

For initial sizing, shear forces in the links may be approximated as follows:

$$V_{i,link} = \frac{\Sigma V_i(h)}{l} = \frac{\Sigma V_i / 2(h)}{l/2}$$

$$V_{2,link} = \left(\frac{\frac{721\,\text{kips}}{1.4}(14')}{30'} \right) = 240.2\,\text{kips}$$

$$V_{3,link} = \left(\frac{\frac{666\,\text{kips}}{1.4}(12')}{30'} \right) = 190.4\,\text{kips}$$

$$V_{4,link} = \left(\frac{\frac{567\,\text{kips}}{1.4}(12')}{30'} \right) = 161.9\,\text{kips}$$

$$V_{5,link} = \left(\frac{\frac{421\,\text{kips}}{1.4}(12')}{30'} \right) = 120.3\,\text{kips}$$

$$V_{R,link} = \left(\frac{\frac{229\,\text{kips}}{1.4}(12')}{30'} \right) = 65.5\,\text{kips}$$

The values for dt_w, V_S and M_S are calculated as follows:

$$\text{Minimum } dt_w = \frac{V_{i,link}}{0.80 \times 0.55\, F_y} \qquad \text{§2213.10.5}$$

$$V_s = .55\, F_y\, dt_w$$

$$M_s = Z_x F_y$$

Preliminary beam sizes are determined as shown in Table 2-6 (forces are $E/1.4$).

Table 2-6. Preliminary link analysis and sizing for frame EBF4

Level	Story h (ft)	$\frac{V_i}{2}$ (kips)	$\frac{F_i}{2}$ (kips)	$V_{i,link}$ req. link shear	min. dt_w (in.^{2})	Link Beam Size	d (in.)	t_w (in.)	dt_w (in.^{2})	Z_x (in.^{3})	M_S (k-in.)	V_S (kips)	1.3 M_S/V_S (in.)	1.6 M_S/V_S (in.)	Link Lg. (in.)	Ω
R	12	81.9	81.9	65.5	2.98	W16x77	16.52	0.46	7.52	150.0	7500	207	47.2	58.1	24	3.16
5	12	150.3	68.5	120.3	5.47	W18X86	18.39	0.48	8.83	186.0	9300	243	49.8	61.3	34	2.02
4	12	202.4	52.0	161.9	7.36	W18X97	18.59	0.54	9.95	211.0	10550	274	50.1	61.7	36	1.69
3	12	238.0	35.6	190.4	8.65	W18X97	18.59	0.54	9.95	211.0	10550	274	50.1	61.7	36	1.44
2	14	257.4	19.4	240.2	10.92	W21X132	21.83	0.65	14.19	333.0	16650	390	55.5	68.3	46	1.62

The most efficient link sections usually:

1. Optimize the required shear area, i.e., minimize dt_w.

2. Are the deepest section possible while complying with the compact web criteria , i.e., maximize dt_w.

3. Have compact flanges with sufficient bending capacity to ensure shear failure of the section under ultimate load.

4. The frames must meet the deflection and link rotation limitations and thus be sized for stiffness.

The recommended [Engelhardt and Popov, 1989] link length is $e_{\max} = 1.3\frac{M_S}{V_S}$

A computer model has been created for EBF4. The results of the computer analysis, including forces and displacements, have been determined. The computer model was analyzed with moment resisting connections, which more closely estimates the real behavior of the frame with end moments much less than M_p.

For the first story, the EBF member design will be based on use of a $W21\times132$ link beam at Level 2.

5d. Link rotation.

The frame displacement at the second level, Δ_{S2}, was determined from a separate computer analysis (not shown) using the design base shear (not divided by 1.4) and not increased by Δ because frame distortion limits are based on calculations using applied strength level seismic forces not increased by the redundancy factor.

$$\Delta_{S2} = 0.48 \text{ in.}$$

The corresponding maximum inelastic response displacement at the second level, Δ_{M2} is estimated as follows:

$$\Delta_M = .7R\Delta_s = .7(7)0.48" = 2.40 \text{ in.} \tag{30-17}$$

The link rotation is computed as a function of the frame story drift and frame geometry. For a frame of story height h, bay width l, link length e, and dimensions $a = \frac{(l-e)}{2}$, the link rotation may be calculated by the following formula [Becker and Ishler, 1996]. Link rotations, θ, must be limited to 0.090 radians per §2213.10.4.

$$\theta = \frac{\Delta_M}{h}\left(l + \frac{2a}{e}\right) = \frac{1.37"}{180"}\left(l + \frac{2(157")}{46"}\right) = 0.060 \text{ radians} \le 0.090$$

$\therefore$ *o.k.*

Note that the frame height, h, in the first story is 180 inches, or 15 ft-0 in. because the base plate is anchored 12 inches below the slab.

5e. Link shear strength. §2213.10.5

The purpose of EBF design is to ensure that any inelastic behavior in the structure under seismic motions occurs in the links. To achieve this, all elements other than the links are designed to have strengths greater than the forces that will be induced in them when the links experience yielding. Therefore, if the links have excess capacity, all other elements in the frame (braces, columns, link beams outside the link lengths) will also have corresponding excess capacity. Section 2213.10.5 requires than the link shear does not exceed $0.8V_s$ under design seismic forces. Thus links have a minimum overstrength factor $\Omega_{min} = (1.0/0.8) = 1.25$ which provides a safety factor on shear capacity. Depending on the actual link beam chosen for design, the link overstrength factor, Ω, may be greater than 1.25. Thus, for the $W21\times132$ link beam with applied shear $V_{i,link} = 240.2\,\text{kips}$ (see Table 2-6):

$$V_s = .55F_y dt_w = .55(50\,\text{ksi})(21.83")(.650") = 390.2 \text{ kips}$$

$$\Omega = \frac{V_s}{V_{i,link}} = \frac{390.2\,\text{k}}{240.2\,\text{k}} = 1.62 \ge 1.25$$

$\therefore$ *o.k* . §2213.4.2

The link beam in this Design Example is sized for stiffness to thus limit deflections and link rotations under code loads. It therefore has greater strength than required

5f. **Beam compact flange.** **§2213.10.2**

Check to assure that the beam flanges are compact to prevent flange buckling.

$$\frac{b_f}{2t_f} = \frac{12.44''}{2(1.035'')} = 6.0 \le \frac{52}{\sqrt{F_y}} = \frac{52}{\sqrt{50\,\text{ksi}}} = 7.36$$

$\therefore$ *o.k.*

5g. **Link length.**

The length of the link will determine whether the link yields in shear or in bending. To ensure shear yielding behavior, the link beams have been limited to lengths less than $3M_s/V_s$.

$$V_s = .55F_y dt_w = 390.2 \text{ kips}$$ §2213.4.2

$$e \approx 1.3\frac{M_s}{V_s} = 55.5 \text{ in.}$$ [Popov, Englehardt, and Ricles]

$$M_s = Z_x F_y = (333\,\text{in.}^3)(50\,\text{ksi}) = 16{,}650\,\text{kip-in.}$$ §2213.4.2

For frame stiffness, drift, and rotation control purposes at the second level, use $\underline{\underline{e = 46\,\text{in.}}}$ Thus:

$$\frac{eV_s}{M_s} = \frac{(46'')(390.2\,\text{kips})}{16{,}650\,\text{kip}-\text{in.}} = 1.08$$

$\therefore$ *o.k.*

5h. **Beam and link axial loads.**

The summation of story forces down to level 3, $\Sigma F_i = V_3$ in Table 2-4, (the sum of level shears from the roof to level 3) is 666k (476k on an ASD basis). The ASD frame forces in level 2 at the left connection and right connection are $F_{2L} = 31.1\,\text{k}/1.4 = 22.2\,\text{k}$ and $F_{2L} = 23.3\,\text{k}/1.4 = 16.7\,\text{k}$. The link beam outside the link must be checked for combined bending, plus axial loads. The link must be checked for bending plus axial loads using the flanges only (because the web is assumed to have yielded in shear and not capable of carrying axial load).

Therefore, the axial force in the link on an ASD basis is:

$$C_{link} = T_{link} = \frac{(31.1\text{k} - 23.3\text{k})}{2 \times 1.4} = 2.8\text{k}$$

The axial force can be factored up to account for actual link design overstrength, Ω. For this link, $\Omega = 1.62$ and the link axial force can be factored to be 4.5 kips.

5i. **Beam compact web.**

The maximum d/t_w ratio permitted for compact beam sections is dependent on the axial load in the beam. Wide flange sections listed in the AISC W shapes tables (AISC-ASD) have compact webs for all combinations of axial stress when the yield strength is less than the tabulated values of F_y.

If a beam section is chosen that does not have a compact web for all axial loads, the section should be checked using allowable stress design of UBC Chapter 22, Division V, Table B5.1 of (AISC-ASD). The web should be compact along the full length of the beam. The UBC does not allow doubler plates to reduce d/t_w requirements for a link beam (see §2213.10.5). For the $W21 \times 132$ beam at the second level of EBF4:

$$dt_w = 33.6$$

$$A = 38.8\,\text{in.}^2$$

Maximum axial force in link beam outside the link:

$$P_{2L} = \frac{\left(\frac{V_3}{2} + F_{2L}\right)}{1.4} = \frac{\left(\frac{666\,\text{kips}}{2} + 31.1\,\text{kips}\right)}{1.4} = 260\,\text{kips}$$

$$f_a = \frac{P_{2L}}{A} = \frac{260\,\text{k}}{38.8\,\text{in.}^2} = 6.7\,\text{ksi}$$

$$\frac{f_a}{F_y} = \frac{6.7\,\text{ksi}}{50\,\text{ksi}} = 0.13 \le 0.16$$ AISC-ASD, Table B5.1

For $f_a \le 0.16F_y$, the allowable d/t_w to prevent local buckling is determined from the equation below.

$$\frac{d}{t_w} = \frac{640}{\sqrt{F_y}}\left(l - 3.74\frac{f_a}{F_y}\right) = \frac{640}{\sqrt{50\,\text{ksi}}}\left(l - 3.74\frac{6.7\,\text{ksi}}{50\,\text{ksi}}\right) = 45.1\,\text{in.}^3 \qquad \text{AISC-ASD, Table B5.1}$$

$$\therefore\ d/t_w = 33.6\,\text{in.}^2 \le 45.1\,\text{in.}^3$$

$\therefore$ *o.k.*

5j. Combined link loads.

This calculation is made to check the combined bending plus axial strength of the link (using loads anticipated to yield the link with the link design overstrength factor, $\Omega = 1.62$).

$$P_{2,link} = 2.8\,\text{k}(1.62) = 4.5\,\text{kips}$$

$$M_{2,link} = V_{S,2}\frac{e}{2} = 390.2\,\text{k}\frac{(46")}{2} = 8{,}975\,\text{kip-in.}$$

$$A_f = b_f t_f = (12.440")\times(1.035") = 12.875\,\text{in.}^2$$

$$Z_f = (d - t_f)(b_f t_f) = (21.83" - 1.035")(12.875\,\text{in.}^2) = 267.7\,\text{in.}^3$$

$$\frac{P_{2,link}}{2A_f} + \frac{M_{2,link}}{Z_f} = \frac{4.5\,\text{k}}{2(12.875\,\text{in.}^2)} + \frac{8{,}975\,\text{ksi}}{267.7\,\text{in.}^3} = 33.7\,\text{ksi} \le 50\,\text{ksi}$$

$\therefore$ Link combined axial plus bending capacity is *o.k.*

5k. Verification of link shear strength. §2213.10.3

The strength of the link is used to establish the minimum strength required of elements outside the link. The link shear strength V_s was determined using the web area d/t_w, of the beam. When a beam has reached flexural capacity, shear in the link may be less than the shear strength of the section. If this is the case, the flexural capacity of the section will limit the shear capacity of the link. Section 2213.10.3 requires that the flexural capacity of the section, reduced for axial stress, be considered as a possible upper limit of the link capacity. This will be checked below.

$$V_s = 390.2\,\text{kips}$$

$$M_{rs} = Z_x\left(f_y - f_a\right) \qquad \text{§2213.10.3}$$

$$f_a = \frac{P_{2,link}}{2A_f} = \frac{4.5\,\text{k}}{2\times 12.875\,\text{in.}^2} = 0.17\,\text{ksi}$$

$$Z_x = 333\,\text{in.}^4 \qquad \text{AISC-ASD, pp. 1-21}$$

$$M_{rs} = 333\,\text{in.}^3\left(50.0\,\text{ksi} - 0.17\,\text{ksi}\right) = 16{,}593\,\text{kip-in.}$$

$$V_{rs} = \frac{2M_{rs}}{e} = \frac{2\left(16{,}593\,\text{kip}-\text{in.}\right)}{\left(46''\right)} = 721\,\text{kips}$$

The controlling shear capacity is the least of V_s or V_{rs}. In this case, $V_s = 390\,\text{kips}$ and $V_{rs} = 721\,\text{kips}$. Therefore the controlling shear capacity is 390 kips.

Thus, the controlling mode of yielding is shear in the link, because the shear required to yield the beam in bending will not be developed.

5l. Required beam brace spacing. §2313.10.18

Section 2213.10.18 requires lateral braces for the top and bottom flanges at the ends of the link beams. The maximum interval $l_{u,max}$ is determined below.

$$l_{u,max} = 76\frac{b_f}{\sqrt{F_y}} = 76\frac{\left(12.87''\right)}{\sqrt{50\,\text{ksi}}} = 138.4'' \cong 11'\text{–}6'' \qquad \text{§2313.10.18}$$

Therefore the beam bracing at 10 ft 0 in. is adequate. (**Note:** the composite steel deck and lightweight concrete fill is not considered effective in bracing the top flange.)

5m. Beam analysis (outside of link). §2213.10.13

The beam outside the link is required to resist 130 percent of the bending, plus axial forces generated in the link beam. The combined beam bending plus axial interaction equations are referenced from AISC-ASD, Section N. Note that the ASD version of capacity design is being used because the beam is being checked under forces generated with a yielding link element in shear.

Forces are from a hand evaluation of EBF frame behavior and from computer model analysis:

Axial force in beam outside link:

$$P_E = 260\,\text{kips}$$

From computer model:

$$P_D = 11\,\text{kips}$$

Increased axial load on beam outside the link:

$$P = 1.3\Omega P_{2,link} + 1.3P_{DL} = (1.3\times 1.62\times 260\,\text{k}) + (1.3\times 11\,\text{kips}) = 564\,\text{kips}$$

From EBF frame analysis:

$$M_E = 8{,}974\,\text{k-in.}$$

From computer analysis:

$$M_D = 188.4\,\text{k-in.}$$

Increased moment on beam outside the link:

$$M = 1.3\frac{V_{link}\,e}{2} + 1.3M_{DL} = 1.3(8{,}974\,\text{k-in.}) + 1.3(188.4\,\text{k-in.}) = 11{,}912\ \text{k-in.}$$

Beam slenderness parameters, assuming $k = 1.0$:

$$\frac{kl}{r_y} = \frac{(1.0)(120'')}{2.93''} = 41.0$$

$$\frac{kl}{r_x} = \frac{(1.0)(150'')}{9.12''} = 16.4$$

Allowable axial stress based on beam slenderness and bracing:

$$F_{ay} = \frac{\left[1 - \dfrac{(kl/r_y)^2}{2C_c^{\,2}}\right]F_y}{\dfrac{5}{3} + \dfrac{3(kl/r_y)}{8C_c} - \dfrac{(kl/r_y)^3}{8C_c^{\,3}}} = \frac{\left[1 - \dfrac{(41.0)^2}{2(107)^2}\right]50\,\text{ksi}}{\dfrac{5}{3} + \dfrac{3(41.0)}{8(107)} - \dfrac{(41.0)^3}{8(107)^3}} = 25.7\,\text{ksi} \qquad \text{AISC-ASD §E2}$$

Euler buckling stress multiplied by a safety factor:

$$F'_{ey} = \frac{12\pi^2 E}{23(kl/r_y)^2} = \frac{12(3.14)^2(29{,}000{,}000\,\text{psi})}{23(41.0)^2} = 88{,}834\,\text{psi} = 88.8\,\text{ksi} \qquad \text{AISC-ASD §E2}$$

Beam slenderness parameter:

$$C_c = \sqrt{\frac{12\pi^2 E}{F_y}} = \sqrt{\frac{12(3.14)^2(29{,}000\,\text{ksi})}{(60\,\text{ksi})}} = 107 \qquad \text{AISC-ASD §E2}$$

ASD axial capacity:

$$P_{cr} = 1.7 F_a A = 1.7(25.69\,\text{ksi})(38.8\,\text{sq in.}) = 1{,}695\,\text{kips} \qquad \text{AISC-ASD §N4,}$$

Euler buckling capacity:

$$P_e = \left(\frac{23}{12}\right) F'_e A = \left(\frac{23}{12}\right)(88.8\,\text{ksi})(38.8\,\text{in.}^2) = 6{,}603\,\text{kips} \qquad \text{AISC-ASD §N4}$$

ASD axial yielding load:

$$P_y = F_y A = (50\,\text{ksi})(38.8\,\text{in.}^2) = 1{,}940\,\text{kips} \qquad \text{AISC-ASD §N4}$$

Maximum moment that can be resisted by the member in the absence of axial load:

$$M_m = M_p = F_y Z_x = (50\,\text{ksi})(333\,\text{in.}^3) = 16{,}650\,\text{k-in.} \qquad \text{AISC-ASD §N4}$$

Coefficient for sidesway:

$$C_m = 0.85$$

Check AISC Equations (N4-2) and (N4-3):

$$\frac{P}{P_{cr}} + \frac{C_m M}{\left(1 - \frac{P_{bu}}{P_e}\right) M_m} = \frac{564\,\text{kips}}{1{,}695\,\text{kips}} + \frac{0.85(11{,}912\,\text{k}-\text{in.})}{\left(1 - \frac{564\,\text{kips}}{6{,}603\,\text{kips}}\right) 16{,}650\,\text{k}-\text{in.}} \qquad \text{AISC-ASD (N4-2)}$$

$$= 0.33 + 0.67 = 1.0$$

$\therefore$ Say *o.k.*

$$\frac{P}{P_y} + \frac{M}{1.18\,M_p} = \frac{564\,\text{kips}}{1{,}940\,\text{kips}} + \frac{11{,}912\,\text{k}-\text{in.}}{1.18\left(16{,}650\,\text{k}-\text{in.}\right)}$$ AISC-ASD (N4-3)

$$= 0.29 + 0.61 = 0.90 \le 1.0$$

$\therefore$ *o.k.*

5n. **Beam stiffeners.** **§2213.10.7**

There are two types of stiffeners required in links: link stiffeners at ends at brace connections and intermediate stiffeners (Figures 2-7 and 2-11).

Link end stiffeners.

Full depth web stiffeners are required on both sides of the link beam at the brace connections. The stiffeners are used to prevent web buckling and to ensure ductile shear yielding of the web.

The stiffeners shall have a combined width not less than b_f - $2t_w$ and a thickness not less than $0.75t_w$ or 3/8 inch. For the $W21\times132$ beam

$$B_f - 2t_w = 12.440'' - 2\left(.650''\right) = 11.14'' \text{ use } 2\times5.625''$$ §2213.10.10

The minimum thickness of the stiffener is

$$t_{stiff} \ge 0.75t_w = 0.75\times.650'' = 0.49'' \text{ use ½ in. stiffeners.}$$

Therefore, use $5^5/_8$ in. × ½ in. link beam stiffeners at link ends at each side of web (total 4).

Intermediate link stiffeners.

Section 2310.10.8 requires intermediate full depth web stiffeners (see Part 7, Figure 2-7) for either of the following conditions:

1. Where link beam strength is controlled by V_s.

2. Where link beam strength is controlled by flexure and the shear determined by applying the reduced flexural strength, M_{rs} exceeds $0.45F_y dt_w$.

Therefore, intermediate web stiffeners are required for this Design Example.

The spacing limits are a function of the link rotation per §2310.10.9. For a link rotation 0.09 radians, the maximum allowed, the spacing shall not exceed $38t_w - d_w/5$. For link rotation of 0.03 radians, the spacing shall not exceed $56t_w - d_w/5$. Linear interpolation may be used between link rotations of 0.03 and 0.09 radians. Thus,

$$38t_w - \frac{d_w}{5} = 38(.650") - \left(\frac{21.83"}{5}\right) = 20.33 \text{ in.} \qquad \text{§2213.10.9}$$

$$56t_w - \frac{d_w}{5} = 56(.650") - \left(\frac{21.83"}{5}\right) = 32.03 \text{ in.} \qquad \text{§2213.10.9}$$

Since the link rotation is 0.088 radians for the beam, interpolation must be used to determine the maximum spacing of intermediate stiffeners. This is shown below.

$$\left[\frac{0.090\,\text{rad} - 0.088\,\text{rad}}{0.090\,\text{rad} - 0.030\,\text{rad}}\right](32.03" - 20.33") + 20.33" = 20.72 \text{ in.}$$

Since the link length is 46 inches, use three equal spacings of 46/3 =15.33 inches.

The web stiffener location is determined in accordance with §2313.10.10. Since the link beam is a W21, one sided stiffeners are required of thickness 3/8-inch. The width shall not be less than:

$$(b_f/2) - t_w + (12.44"/2) - .650" + 5.57 \text{ in.}$$

Therefore, use 5-5/8 in. × 3/8 in. intermediate (one-sided) stiffener plates (2 total).

Web stiffener welds.

Fillet welds connecting the web stiffener to the web shall develop a stiffener force of:

$$A_{st}F_y = (5.625" \times .375")(50\,\text{ksi}) = 105.5\,\text{kips}$$

The minimum size of fillet weld, per AISC Table J2.4, is ¼-inch to the link web and 5/16 in. to the link flange. Using E70XX electrodes and 5/16-inch fillet welds each side, the weld capacity is 1.7 allowable. The required weld length is

$$1_{required} = \frac{105.5\,\text{kips}}{.3}(70\,\text{ksi})(1.7)(2 \times 5/16")(.707) = 6.7 \text{ in.}$$

Therefore, 5/16 in. fillet welds, both sides of the stiffener, at the flanges and the web are adequate.

Fillet welds connecting the web stiffener to the flanges shall develop a stiffener force of

$$A_{st}F_y / 4 = (5.625'' \times .375'')(50\,\text{ksi}) / 4 = 26.4\,\text{kips}$$

$$1,_{required} = \frac{26.4\,\text{kips}}{.3}(70\,\text{ksi})(1.7)(2 \times 5/16'')(.707) = 1.7 \text{ in.}$$

Therefore, 5/16-inch fillet welds, both sides of the stiffener, at the flanges are adequate.

5o. Link beam design.

Tables 2-7a through 2-7g presents tabular calculations that show the results from procedures from Parts 5a through 5s applied to all beams in the frame EBF4. The link beam design for all levels is as shown below in tabular form following the equations given above (each link beam at each level of the frame has a row calculation which extends through the full table):

Table 2-7a. Link beam section properties

Level	Link	A (in.^{2})	Z_x (in.^{3})	b_f (in.)	t_f (in.)	d (in.)	t_w (in.)	e (in.)	a (in.)	h (in.)	A_f (in.^{2})	Z_f (in.^{3})	F_y (ksi)
R	W16x77	22.60	150.0	10.30	0.76	16.52	0.46	24	168	144	15.6	123.3	50
5	W18X86	25.30	186.0	11.09	0.77	18.39	0.48	34	163	144	17.1	150.5	50
4	W18X97	28.50	211.0	11.15	0.87	18.59	0.54	36	162	144	19.4	171.8	50
3	W18X97	28.50	211.0	11.15	0.87	18.59	0.54	36	162	144	19.4	171.8	50
2	W21X132	38.80	333.0	12.44	1.04	21.83	0.65	46	157	168	25.8	267.7	50

Table 2-7b. Compact flange, compact web

Level	V_s	Ω	M_s	$b_f/2t_f$	Compact Flange Limit $b_f/2t_f$	Compact Flange Results	1.3 M_s/V_s	f_a	f_a/F_y	d_{tw}	Compact web Limit d_{tw}	Compact Web Results
R	206.7	3.16	7,500	**6.77**	7.35	**o.k.**	47.2	4.14	0.08	**36.3**	62.5	**o.k.**
5	242.7	2.02	9,300	**7.20**	7.35	**o.k.**	49.8	6.33	0.13	**38.3**	47.7	**o.k.**
4	273.5	1.69	10,550	**6.41**	7.35	**o.k.**	50.1	7.36	0.15	**34.7**	40.7	**o.k.**
3	273.5	1.44	10,550	**6.41**	7.35	**o.k.**	50.1	8.53	0.17	**34.7**	36.3	**o.k.**
2	390.2	1.62	16,650	**6.01**	7.35	**o.k.**	55.5	6.71	0.13	**33.6**	45.1	**o.k.**

Table 2-7c. Combined link stresses, controlling shear, unsupported length

Level	Shear Levels Above (kips)	Level at level (kips)	P_{max} Link Beam (kips)	f_a (ksi)	P_{link} (kips)	Diaph. Factor	M_{link} (k-in.)	f_a (psi)	Comb. Link Stress (psi)	V_s (kips)	M_{rs} (k-in.)	V_{rs} (kips)	V_{min} (kips)	l_u Max (in.)
R	0	131.0	94	4.14	16.4	1.00	785.9	0.75	**6.7**	206.7	7.388	615.7	**206.7**	**110.7**
5	229.2	109.5	160	6.33	13.7	1.12	2.044.5	0.64	**13.9**	242.7	9.181	540.0	**242.7**	**119.2**
4	420.9	83.3	210	7.36	10.4	1.31	2.914.1	0.50	**17.2**	273.5	10.444	580.2	**273.5**	**119.8**
3	566.6	57.0	243	8.53	7.1	1.69	3.426.8	0.44	**20.2**	273.5	10.456	580.9	**273.5**	**119.8**
2	666.3	31.1	260	6.71	3.9	2.70	5.525.6	0.29	**20.8**	390.2	16.553	719.7	**390.2**	**133.7**

Table 2-7d. Calculation of design forces, beam outside the link

Level	P (kips)	$M = V_s e/2$ (k-in.)	Link Ω	Beam Overstress Factor	P_{comp} DL (kips)	M_{comp} "DL" (k-in.)	Beam Overstress Factor	P_{bu} Design (kips)	M_{bu} Design (kips)
R	94	2,480	3.16	1.3	10	208.8	1.3	397	3,496
5	160	4,127	2.02	1.3	8.73	226.8	1.3	431	5,660
4	210	4,923	1.69	1.3	11.2	213.6	1.3	475	6,678
3	243	4,923	1.44	1.3	10	200.4	1.3	467	6,661
2	260	8,975	1.62	1.3	11	188.4	1.3	564	11,912

Table 2-7e. Beam properties

Level	Section	A ($in.^2$)	Z ($in.^3$)	F_y (ksi)	L_u (ft)	r_x (in.)	r_y (in.)	kl/r_y	C_c (ksi)	$kl/r_y/C_c$
R	W16x77	22.6	150	50	10	5.89	1.92	62.5	107.0	0.58
5	W18X86	25.3	186	50	10	7.77	2.63	45.6	107.0	0.43
4	W18X97	28.5	211	50	10	7.82	2.65	45.3	107.0	0.42
3	W18X97	28.5	211	50	10	7.82	2.65	45.3	107.0	0.42
2	W21X132	38.8	333	50	10	9.12	2.93	41.0	107.0	0.38

Table 2-7f. AISC-ASD equations (N4-1) and (N4-2)

Level	F_a (ksi)	F'_e (ksi)	P_{cr} (k)	P_e (k)	P_y (k)	M_m, M_p (k-in.)	C_m	P Design (k)	M Design (k-in.)	AISC-ASD (N4-2)	AISC ASD (N4-3)	Results
R	22.3	38.2	856	1,655	1,130	7500	0.85	397	3,496	**0.98**	**0.75**	**o.k.**
5	25.0	71.7	1,076	3,478	1,265	9300	0.85	431	5,660	**0.99**	**0.86**	**o.k.**
4	25.1	72.8	1,214	3,978	1,425	10550	0.85	475	6,678	**1.00**	**0.87**	**o.k.**
3	25.1	72.8	1,214	3,978	1,425	10550	0.85	467	6,661	**0.99**	**0.86**	**o.k.**
2	25.7	89.0	1,695	6,620	1,940	16650	0.85	564	11,912	**1.00**	**0.90**	**o.k.**

Table 2-7g. Link rotations at each level

Level	Delta S Deflection (in.)	Delta M Drift (in.)	Rotation (rad)	Results
R	1.01	0.69	0.0715	**o.k.**
5	0.87	0.88	0.0649	**o.k.**
4	0.69	1.13	0.0783	**o.k.**
3	0.46	1.08	0.0749	**o.k.**
2	0.24	1.18	0.0548	**o.k.**

5p. **Brace design.** **§2213.10.13**

The braces are required to be designed for 1.3Ω times the earthquake forces in the braces, plus 1.3 times the gravity loads. There is a misprint in 97 UBC §2213.10.13, where the brace and beam overstrength factor is both 1.5 and 1.3. However, the factor 1.5 was from the 1994 UBC and should have been deleted. The factor 1.3 should be used.

$$P_E = 1.3\Omega\ P_{computer} \text{ due to } \frac{E}{1.4} \text{ loads}$$

$$M_E = 1.3\Omega\ M_{computer} \text{ due to } \frac{E}{1.4} \text{ loads}$$

Using plastic design procedures outlined in AISC Section N, obtaining forces from a computer analysis, and showing calculations in tabular form. Design forces for braces (P and M) are calculated as 1.3ϕ times seismic forces plus 1.3 times gravity forces. Column shear forces are not a controlling factor and are not shown for brevity. Tables 2-8a through 2-8c show tabular design of braces for EBF4 at all levels.

Table 2-8a. Brace forces

Level	P_E E/1.4	M_E E/1.4	Ω	Brace Overstress Factor	P_D D	M_D D	Brace Overstress Factor	P Design	M Design
5	106	10.2	3.16	1.5	11.8	5.1	1.5	519.5	55.9
4	194	11.7	2.02	1.5	14.6	4.4	1.5	609.3	42.0
3	262	23.4	1.69	1.5	14.7	4.3	1.5	686.0	65.7
2	302	26.7	1.44	1.5	14.4	4.3	1.5	672.4	64.0
1	372	38.5	1.62	1.5	13.9	3.4	1.5	927.2	98.9

Table 2-8b. Brace section properties

Level	Brace Section	A (in.^{2})	Z (in.^{3})	F_y (ksi)	L (ft)	r_x (in.)	r_y (in.)	kl/r_y	C_c (ksi)	$kl/r_y/C_c$
5	W12X87	25.60	132.0	50	20.5	5.34	3.31	74.4	107.0	0.70
4	W12x87	25.60	132.0	50	20.2	5.38	3.32	73.1	107.0	0.68
3	W12x87	25.60	132.0	50	20.2	5.43	3.34	72.5	107.0	0.68
2	W12X106	31.20	164.0	50	20.2	5.57	3.41	71.0	107.0	0.66
1	W12X120	35.30	186.0	50	19.9	5.66	3.44	69.4	107.0	0.65

Table 2-8c. Brace, axial plus bending interaction calculations

Level	F_a (ksi)	F'_e (ksi)	P_{cr} (k)	P_e (k)	P_y (k)	M_m, M_p (k-in.)	C_m	P Design (k)	M Design (k-in.)	AISC (N4-2)	AISC (N4-3)	Results
5	20.1	262.1	875.2	12,860	1280	6600	0.85	450.2	659.0	0.60	0.35	**o.k.**
4	20.3	262.1	885.6	12,860	1280	6600	0.85	528.0	493.7	0.66	0.41	**o.k.**
3	20.5	262.1	890.8	12,860	1280	6600	0.85	594.5	778.7	0.77	0.46	**o.k.**
2	20.7	262.1	1100.5	15,673	1560	8200	0.85	582.8	757.5	0.61	0.37	**o.k.**
1	21.0	262.1	1262.8	17,732	1765	9300	0.85	803.5	1178.6	0.75	0.46	**o.k.**

5q. Column design. §2213.10.14

The columns are required to resist 1.25 times the strength developed in the links to assure that the yielding mechanism is the link beams (Section 2213.10.14). Design forces (P and M) are calculated as 1.25Ω times (frame analysis) seismic forces plus 1.25 times gravity forces. Column shear forces are not a controlling factor and are not shown for brevity. Tables 2-9a through 2-9c show tabular design of columns for EBF4 at all levels

Table 2-9a. Design column forces

Level	P_E E/1.4	M_E E/1.4	Ω	Brace Overstress Factor	P_D D	M_D D	Brace Overstress factor	P Design	M Design
km5	106	10.2						432.9	46.6
4	3.16	1.25	11.8	5.1	1.25			507.7	35.0
3	2.02	1.25	14.6	4.4	1.25			571.7	54.8
2	1.69	1.25	14.7	4.3	1.25	4.3	1.25	560.3	53.3
1	372	38.5	1.62	1.25	13.9	3.4	1.25	772.6	82.4

Table 2-9b. Column section properties

Level	Column Section	A (in.^{2})	Z (in.^{3})	F_y (ksi)	L (ft)	r_x (in.)	r_y (in.)	kl/r_y	C_c (ksi)	$kl/r_y/C_c$
5	W12X65	19.10	96.8	50	12	5.28	5.67	2.48	107.0	0.02
4	W12X65	19.10	96.8	50	12	5.28	5.67	2.48	107.0	0.02
3	W12X65	19.10	96.8	50	12	5.28	5.67	25.4	107.0	0.24
2	W12X87	25.60	132.0	50	12	5.38	5.72	25.2	107.0	0.24
1	W12X87	25.60	132.0	50	14	5.38	5.72	29.4	107.0	0.27

Table 2-9c. Column axial plus bending interaction calculations

Level	F_a (ksi)	F'_e (ksi)	P_{cr} (k)	P_e (k)	P_y (k)	M_m, M_p (k-in.)	C_m	P Design (k)	M Design (k-in.)	AISC (N4-2)	AISC (N4-3)	Results
5	29.8	262.1	968	9,594	955	4840	0.85	432.9	559.4	**0.55**	**0.45**	**o.k.**
4	29.8	262.1	968	9,594	955	4840	0.85	507.7	420.2	**0.60**	**0.53**	**o.k.**
3	27.7	262.1	899	9,594	955	4840	0.85	571.7	657.5	**0.76**	**0.60**	**o.k.**
2	27.7	262.1	1,206	12,860	1280	6600	0.85	560.3	639.9	**0.55**	**0.44**	**o.k.**
1	27.2	262.1	1,185	12,860	1280	6600	0.85	772.6	989.0	**0.79**	**0.60**	**o.k.**

5r. Foundation design considerations.

In EBF design, special consideration should be given to the foundation design. The basis for design of the EBF is that the yielding occurs in the EBF links. Thus, all other elements should have the strength to develop the link beam yielding strengths.

The code does not require the foundation design to be capable of developing the link beam strengths. However, if only a minimum code foundation design is performed, the foundation will generally not develop the EBF link beam strengths, and yielding will occur in the foundation. This is not consistent with the design philosophy for EBF frames.

The SEAOC Blue Book recommends that the foundation be designed to develop the strength of the EBF frame. The intention is to have adequate foundation strength and stability to ensure the development of link beam yield mechanisms to achieve the energy dissipation anticipated in the eccentric braced frames. A static pushover analysis of an EBF frame can give a good indication of the foundation adequacy.

5s. Final frame member sizes (ASD).

Table 2-10. Final frame member sizes for EBF4 (ASD)

Level	Beams	Link Lengths	Columns	Braces
Roof	W16X77	24"		
5	W18X86	34"	W12X65	W12X87
4	W18X97	36"	W12X65	W12X87
3	W18X97	36"	W12X65	W12X87
2	W21X132	46"	W12X87	W12X106
1			W12X87	W12X120

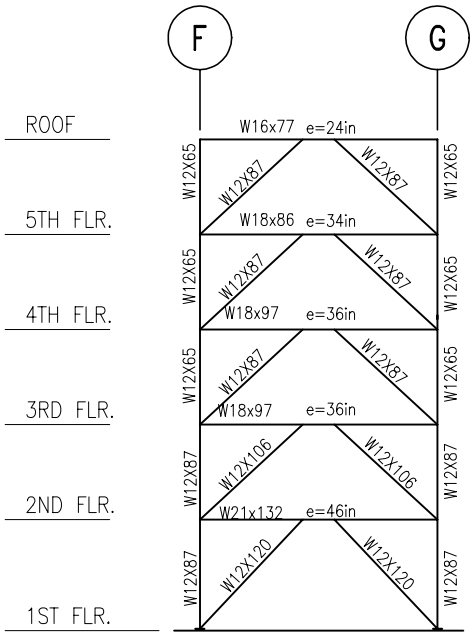

Figure 2-5. EBF4 frame member sizes (ASD)

6. EBF member design using (LRFD).

In the 1997 UBC, a designer has a choice of whether to design using allowable stress design (ASD) methods or whether to use load and resistance factor design (LRFD) methods. In part 5, the ASD method is illustrated. In part 6, the LRFD method is illustrated. The results are slightly different, depending on the method chosen. In this part, the frame EBF4 that was designed to ASD requirements in Part 5 is now designed to LRFD requirements of AISC-Seismic.

LRFD design provisions for EBF frames are contained in Section 15 of the AISC document*, "Seismic Provisions for Structural Steel Buildings,"* published in 1997. This document is commonly known as *AISC-Seismic.* Note that the S*eismic Provisions for Structural Steel Buildings*, 1992 edition, is included in the AISC-LRFD Manual, Part 6, which is adopted by reference in the code in Chapter 22, Division II, §2206. However, the 1997 AISC-Seismic provisions have been updated and are recommended in the SEAOC Blue Book, Section 702.

6a. **Link shear strength.**

The link shear strength V_n can be found from the minimum values of V_p or $2M_p/e$. The values for V_p are calculated as follows:

$$(d - 2t_f)t_w \geq \frac{V_{i,link}}{0.90(0.60)F_y}$$ AISC-Seismic §15.2d

$$V_p = 0.60\,F_y t_w (d - 2t_f)$$ AISC-Seismic §15.2d

$$M_p = Z_x F_y$$

Preliminary beam sizes are determined as shown in Table 2-11. Note that seismic forces for LRFD procedures use both E_h and E_v. The E_v seismic force is additive to dead load D and is included in the load combination of Equation (12-5).

$$1.2D + f_1 l + 1.0E \qquad (12\text{-}5)$$

$$E = \Delta E_h + E_v$$

$$E_v = 0.5C_a ID = 0.5(0.53)(1.0)D = 0.265D$$

Substituting for E_h, E_v, and f_1 in Equation (12-5)

$$1.2D + 0.5l + 1.0(\Delta E_h + E_v)$$

$$= 1.2D + 0.5l + 1.0(1.13E_h + 0.265D)$$

$$= 1.465D + 0.5l + 1.13E_h$$

Tables 2-11a through 2-11c show preliminary link analysis and sizing (LRFD).

Table 2-11a. Design seismic forces at EBF frame

Level	Story Forces	Frame Forces, E_h			Frame Forces, E_h			F_i	$V_i/2$
		Left	Right	C, T link	F_{il}	F_{ir}	V_i		
R	229	131.0	98.2	16.4	**131.0**	**98.2**	229.2	229.2	114.6
5	192	109.5	82.1	13.7	**109.5**	**82.1**	420.9	191.7	210.4
4	146	83.2	62.4	10.4	**83.2**	**62.4**	566.6	145.7	283.3
3	100	57.0	42.7	7.1	**57.0**	**42.7**	666.2	99.7	333.1
2	54	31.1	23.3	3.9	**31.1**	**23.3**	720.6	54.4	360.3

Table 2-11b. Preliminary link beam sizes and properties

Level	Story Height	$F_i/2$	$F_i/2$	V_{li}	$(d-2t_f)t_w$ min.	Size	d	t_w	t_f
R	12	114.6	114.6	105.8	3.92	W14X38	14.10	0.31	0.52
5	12	95.8	95.8	194.3	7.19	W16X89	16.75	0.53	0.88
4	12	72.8	72.8	261.5	9.68	W21X111	21.51	0.55	0.88
3	12	49.8	49.8	279.8	10.36	W21X122	21.68	0.60	0.96
2	15	27.2	27.2	415.8	15.40	W27X178	27.81	0.73	1.19

Table 2-11c. Preliminary link beam results

Level	$(d-2t_f)t_w$	Results	Z_x	M_p	ϕV_p	1.3 M_p/V_p	1.6 M_p/V_p	Link e	Ratio M_p/V_p	Ω	CDR
R	4.05	**o.k.**	61.50	3,075	109	36.5	45.0	**32**	**1.26**	**1.15**	**1.03**
5	7.88	**o.k.**	175.00	8,750	213	53.5	65.8	**48**	**1.30**	**1.22**	**1.09**
4	10.87	**o.k.**	279.00	13,950	293	61.8	76.1	**56**	**1.31**	**1.25**	**1.12**
3	11.86	**o.k.**	307.00	15,350	320	62.3	76.7	**56**	**1.30**	**1.27**	**1.14**
2	18.44	**o.k.**	567.00	28,350	498	74.0	91.1	**66**	**1.29**	**1.33**	**1.20**

For the first (ground level) story, the EBF link beam design will be based on use of a $W27\times178$ link beam at Level 2. Note that §15.2 of AISC-Seismic limits the yield strength of the link beam to $F_y = 50\,\text{ksi}$.

6b. Link rotation.

The frame displacement at the second level, Δ_{S2}, was determined from a separate computer analysis (not shown) using the design base shear without Δ.

$$\Delta_{S2} = 0.28 \text{ in.}$$

The corresponding inelastic displacement, Δ_{M2} may be estimated from a static analysis by the following formula:

$$\Delta_M = .7R\Delta_s = .7(7)0.28'' = 1.37 \text{ in.} \qquad (30\text{-}17)$$

The link rotation is computed as a function of the frame story drift and frame geometry. For a frame of story height h, bay width l, link length e, and dimensions $a = l - e/2$, the link rotation may be calculated by the following formula. Link rotations, θ, must be limited to 0.080 radians per AISC-Seismic §15.2g.

$$\theta = \frac{\Delta_M}{H}\left(1 + \frac{2a}{e}\right) = \frac{1.37''}{180''}\left(1 + \frac{2(147'')}{66}\right) = 0.042 \text{ radians} \le 0.080$$

$\therefore$ *o.k.*

Comment: The above formula makes the assumption that all deformation occurs within the link rotation at a particular level. It has been observed that there is significant contribution to deformations from column and brace elongation and shortening. A more accurate analysis of link rotation can be made looking at joint displacements and calculating rotations based on relative joint displacements. Another simple method is to perform an analysis using very strong column and brace section properties in the model and force all deformations into the link beam for purposes of evaluating the link rotations.

6c. **Link shear strength.** **AISC-Seismic §15.2d**

The nominal shear strength of the link, V_n, is equal to the lesser of V_p or $2M_p/e$. Solving for the design strength ϕV_n.

$\phi V_n \le V_{i,link}$ at any given level

$$\phi V_n = 0.9(0.60)F_y t_w (d - 2t_f) = 0.9(0.6)(50\,\text{ksi})(.73'')[27.8'' - 2(1.19'')] = 498\,\text{kips}$$

$$\frac{\phi 2M_p}{e} = \frac{0.9(2)M_p}{e} = \frac{0.9(2)F_y Z_x}{e} = \frac{0.9(2)(50\,\text{ksi})(567.0\,\text{in.}^3)}{66''} = 773\,\text{kips}$$

$$\phi V_n = 498\,\text{kips}$$

$$\phi V_n = \frac{498\,\text{kips}}{0.9} = 553\,\text{kips}$$

The design overstrength factor for this link beam Ω is calculated as follows:

$$\Omega = \frac{V_n}{V_{i,link}} = \frac{553\,\text{kips}}{416\,\text{kips}} = 1.33$$

The minimum link design shear overstrength ratio is controlled by the ϕ factor. Thus, the minimum Ω is $\Omega_{min} = 1.0/\phi = 1.0/0.9 = 1.11$. The significance of the overstrength ratio is that the link will not yield until seismic forces overcome the link yield point. The overstrength factor Ω is a relationship between code forces and design overstrength forces which will likely yield the link. Note that the Ω factor does not include the R_y factor for expected yield stress of the steel.

The link beam in this Design Example has been sized for strength and stiffness. In beams above the level under discussion, it was found necessary to add cover plates for the beams outside the links (for increased beam capacity outside the link). The attempt was made to balance the design between good ratios of M_p/V_p of approximately 1.3 and the requirement for cover plates outside the link. It was decided to use cover plates to meet strength requirements for EBF beams outside the link to maintain desired ratios of M_p/V_p. The trade-off is to lessen the ratio of M_p/V_p and not require cover plates. It is believed that the performance of the link is more important than the cover plate requirement, and thus it was not possible to size beams to meet requirements outside the link without beam cover plates for this configuration of EBF frame.

6d. Beam compact flange.

Check the $W27\times178$ beam to ensure that the flanges are compact to prevent flange buckling.

$$\frac{b_f}{2t_f} = \frac{14.09''}{2(1.19'')} = 5.92 \le \frac{52}{\sqrt{F_y}} = \frac{52}{\sqrt{50\,\text{ksi}}} = 7.35$$

$\therefore$ *o.k.* AISC-Seismic, Table I-9-1

6e. Link length.

The length of the link will determine whether the link yields in shear or in bending deformations. To ensure the desired shear yielding behavior (see discussion in Part 5b), the link beams have been limited to lengths less than $1.3M_p/V_p$. From part 6c, V_p and M_p are calculated:

$$V_p = 553\,\text{kips}$$

$$M_p = Z_x F_y = (567\,\text{in.}^3)(50\,\text{ksi}) = 28{,}350\,\text{kip-in.}$$

Check that the $1.3M_p/V_p$ criteria is not exceeded.

$$\frac{eV_p}{M_p} = \frac{(66")(553\,\text{kips})}{28{,}350\,\text{k}-\text{in.}} = 1.29 \le 1.3$$

$\therefore \quad o.k.$

Second floor link length of 66 inches is *o.k.*

6f. Verification of link shear strength.

The strength of the link is used to establish the minimum strength required of elements outside the link. The link shear strength V_p was determined using the web area (d-$2t_f$) of the beam. When the beam has reached flexural capacity, shear in the link may be less than the shear strength of the section. If this is the case, the flexural capacity of the section will limit the shear capacity of the link. AISC-Seismic §15.2f requires that the shear strength of the section be the minimum of shear yielding strength or shear required for plastic moment yielding behavior.

$$V_p = 553\,\text{kips}$$

$$\frac{2M_p}{e} = \frac{2(50\,\text{ksi})(576\,\text{in.}^3)}{66"} = 872\,\text{kips}$$

The controlling nominal shear capacity V_n is the minimum of V_p or $2V_p/e$. From Part 6c, $V_n = 553\,\text{kips}$. By selecting the W27x178 section as the link beam, the controlling mode of yielding is shear yielding in the link and therefore bending yielding will not be developed.

6g. Required beam brace spacing. §2313.10.18

The limiting unbraced length for full plastic bending capacity, L_p, is determined as follows. Lateral beam braces for the top and bottom flanges at the ends of the link beams are still required.

$$L_p = \frac{300r_y}{\sqrt{F_{yf}}} = \frac{300(3.26")}{\sqrt{50\,\text{ksi}}} = 138.3" \cong 11'\text{–}6" \qquad \text{AISC-LRFD (F1-4)}$$

Therefore, the beam bracing at 10 ft.-0 in. is adequate. (**Note:** the composite steel deck and lightweight concrete fill is not considered effective in bracing the top flange.)

6h. Beam and link axial loads.

The summation of story forces down to level 3, $\Sigma F_i = V_3$ in Table 2-4 (the sum of level shears from the roof to Level 3) is 666 k. The frame forces in Level 2 at the left connection and right connection are $F_{2L} = 31.1\text{k}$ and $F_{2R} = 23.3\text{k}$.

If the required axial strength of the link P_u is equal to or less than $0.15P_y$, the effect of axial force on the link design shear strength need not be considered.

Therefore, the axial force in the link is:

$$C_{link} = T_{link} = \frac{(31.1\text{k} - 23.3\text{k})}{2} = 3.90\text{k}$$

The maximum axial stress in the link must be checked for the requirements of §15.2e of AISC-Seismic:

$$f_a = \frac{\Omega(3.9\,\text{kips})}{A_g} = \frac{1.33(3.9\,\text{kips})}{52.30\,\text{in.}^2} = 0.10 \le 0.15F_y$$

Therefore, the effect of axial force on the link design shear strength need not be considered.

6i. Beam compact web. AISC-Seismic §9.4

The maximum h_c/t_w ratio permitted for compact beam sections is dependent on the axial load in the beam. Sections noted F_y''' in the AISC-LRFD (2nd Edition) have compact webs for all combinations of axial stress when the yield strength is less than the tabulated values.

If a beam section is chosen that does not have a compact web for all axial loads, the section should be checked using Table I-9-1, of AISC-Seismic. The web should be compact along the full length of the beam. Both the UBC and AISC-Seismic do not allow the use of doubler plates for a link beam.

For a $W27\times178$ beam.

$$A = 52.30\,\text{in.}^2$$

$$\frac{h_c}{t_w} = \frac{d-2k}{t_w} = \frac{27.81'' - 2(1.875'')}{0.73''} = 32.9$$

Maximum axial force in link beam outside the link:

$$P_{2L} = \Omega\left[\frac{V_3}{2} + F_{2L}\right] = 1.33\left[\frac{666\,\text{kips}}{2} + 31.1\,\text{kips}\right] = 484\,\text{kips}$$

$$\frac{P_u}{\phi_b P_y} = \frac{484\text{kips}}{0.90(50\,\text{ksi})(52.30\,\text{in.}^2)} = 0.21 \geq 0.125$$ AISC-Seismic, Table I-9-1

For $P_u/\phi_b P_y \geq 0.125$, allowable d/t_w to prevent local buckling is determined from the equation below.

$$\left(\frac{h_c}{t_w}\right) = \frac{191}{\sqrt{F_y}}\left(2.33 - \frac{2.75P_u}{\phi_b P_y}\right) = \frac{191}{\sqrt{50\,\text{ksi}}}\left(2.33 - \frac{(364\,\text{kips})}{0.9(2{,}615\,\text{kips})}\right) = 58.8 \geq \frac{253}{\sqrt{F_y}} = 5.06$$

$$\therefore h_c / t_w = 32.9 \leq 58.8$$

$\therefore$ *o.k.* AISC-Seismic, Table I-9-1

6j. Combined link loads.

The combined bending plus axial strength of the link must be checked and compared with the yield stress. In the link, axial and bending stresses are resisted entirely by flanges.

$$P_u = 3.9\,\text{kips}(\Omega) = 3.9\,\text{kips}(1.33) = 5.2\,\text{kips}$$

$$\frac{P_u}{P_y} = \frac{364\,\text{kips}}{(50\,\text{ksi})(52.30\,\text{in.}^2)} = 0.14 \leq 0.15$$ AISC-Seismic §15.2f

Moment from yielding link shear:

$$M_u = V_p\frac{e}{2} = 553\,\text{k}\frac{(66")}{2} = 18{,}249\,\text{kip} - \text{in.}$$

$$A_f = b_f t_f = (14.09")\times(1.19") = 16.77\,\text{in.}^2$$

$$Z_f = (d - t_f)(b_f t_f) = (27.81'' - 1.19'')(16.77\,\text{in.}^2) = 446.2\,\text{in.}^3$$

$$\frac{P_u}{2A_f} + \frac{M_u}{Z_f} = \frac{10.5\,\text{kips}}{2(16.77\,\text{in.}^2)} + \frac{18{,}249\,\text{k} - \text{in.}}{446.2\,\text{in.}^3} = 40.9\,\text{ksi} \le 50\,\text{ksi}$$

∴ Link combined axial plus bending capacity is *o.k.*

6k. Beam analysis (outside of link). AISC-Seismic, AISC §15.6b

Link beams have difficulty resisting the link beam moments increased by 1.1 and R_y when using a lower bound strength not including R_y. Although AISC-Seismic allows the LRFD design strength to be increased by R_y, it is not very clear how AISC-Seismic had intended it to be performed. In conversation with representatives of AISC-Seismic, it was conveyed to the author of this Design Example that the intention was simply to increase LRFD design strengths (P_n, M_n) by an R_y factor. It was not the intention of the AISC-Seismic subcommittee to increase F_y by R_y and carry those values through all the LRFD design equations.

The solution in this Design Example has the beam outside the link resisting the entirety of the link beam moment. A more refined analysis can be performed where the brace contributes to the resistance of moment, which would reduce the moment on the beam outside the link. The analysis in this Design Example includes the use of flange cover plates to increase the bending capacity of the beam outside the link.

The beam outside the link is required to resist 110 percent of the bending and axial forces corresponding to the link beam yield, using its nominal strength R_y. The combined beam bending plus axial interaction equations are referenced from AISC-LRFD Section H. Axial load analysis is referenced from AISC-LRFD Section E and bending analysis is referenced from AISC-LRFD Section F.

The steps below yield forces from the hand evaluation of EBF frame behavior and from the computer model (not shown).

Axial force in beam outside link is:

$$P_E = 364\,\text{kips}$$

From computer model, the load combination of Equation (12-5), including $E_v = 0.265D$, is:

$$1.2D + 0.265D + 0.5l + 1.0E_h$$

$$1.465D + 0.5l; P_{D+L} = 18\,\text{kips}$$

From EBF4 frame analysis:

$$M_E = 18{,}249 \text{ kip-in.}$$

$$P_u = (1.1)(1.33)(1.3)(364\text{k}) + (1.15)(18\text{kips}) = 712\text{kips}$$ AISC-Seismic §15.6a

$$P_u = 1.1\Omega R_y P_E + 1.1 P_{D+L}$$

From computer analysis, load combination Equation (12-5):

$$1.2D + 0.265D + 0.5l + 1.0E_h$$

$$M_{D+L} = 307 \text{ kip-in.}$$

$$M_u = \frac{1.1 R_y V_p e}{2} + 1.1 M_{D+L}$$

$$= \frac{1.1(1.3)(553\text{kips})(66")}{2} + 1.1(307 \text{ kip-in.})$$

$$= 26{,}443 \text{ kip-in.}$$

Beam section properties.

Combined section properties are given in Table 2-12, the reader should understand how to convert typical beam section properties to those with cover plates:

The beam at Level 2 does not require cover plates. The beams at Levels 3-Roof all require cover plates and thus have transformed section properties for use in the following equations.

For $W27\times170$ beam without cover plates:

$$A = 52.3\text{in.}^2$$

$$Z_x = 567\text{in.}^3$$

$$Z_f = 446\text{in.}^3$$

$$I_x = 6{,}990\text{in.}^4$$

$$S_x = 503\text{in.}^3$$

$$r_y = 3.26\text{in.}$$

$I_y = 555\,\text{in.}^4$

$J = 19.5\,\text{in.}^4$

$C_w = 98{,}300\,\text{in.}^6$

$X_1 = 2{,}543$

$X_2 = 0.00375$

Beam slenderness parameters:

$$\frac{kl}{r_y} = \frac{(1.0)(120'')}{3.26''} = 36.8$$

Slenderness parameter for beam-column l_c is calculated as follows:

$$l_c = \frac{kl}{r\pi}\sqrt{\frac{F_y}{E}} = \frac{36.8}{3.1416}\sqrt{\frac{(50\,\text{ksi})}{29{,}000\,\text{ksi}}} = 0.487 \qquad \text{AISC-LRFD (E2-4)}$$

The critical axial stress F_{cr} is calculated:

For $l_c \le 1.5$:

$$F_{cr} = \left(0.658^{l_c^2}\right)F_y = \left(0.658^{.487^2}\right)(50\,\text{ksi}) = 45.3\,\text{ksi} \qquad \text{AISC-LRFD (E2-2)}$$

$\phi_c = 0.85$

Nominal axial strength is calculated as follows:

$$P_n = A_g F_{cr} = \left(52.3\,\text{in.}^2\right)(45.3\,\text{ksi}) = 2{,}368\,\text{kips} \qquad \text{AISC-LRFD (E2-1)}$$

$$R_y P_n = 1.3(2{,}368\,\text{kips}) = 3{,}078\,\text{kips} \qquad \text{AISC-Seismic §15.6b}$$

Bending capacity calculations are calculated:

$\phi_b = 0.90$ AISC-LRFD§F1.1

$M_n = M_p$ for a limit state if flexural yielding AISC-LRFD (F1-1)

$$M_p = Z_x F_y = \left(567\,\text{in.}^3\right)(50\,\text{ksi}) = 28{,}350\,\text{k-in.}$$

Check lateral torsional buckling stability and allowable strength:

$$M_n = C_b\left[M_p - (M_p - M_r)\left(\frac{L_b - L_p}{L_r - L_p}\right)\right] \le M_p \qquad \text{AISC-LRFD (F1-2)}$$

$$C_b = 1.0$$

Unbraced length:

$$L_b = 120 \text{ in.}$$

Limiting laterally unbraced length for full plastic yielding:

$$L_p = \frac{300 r_y}{\sqrt{F_{yf}}} = \frac{300(3.26)}{\sqrt{50\,\text{ksi}}} = 138 \text{ in.} \qquad \text{AISC-LRFD (F1-2)}$$

Limiting laterally unbraced length for inelastic lateral torsional buckling:

$$L_r = \frac{r_y X_1}{F_L}\sqrt{1+\sqrt{1+X_2 F_L{}^2}} \qquad \text{AISC-LRFD (F1-6)}$$

Limiting buckling moment:

$$M_r = F_L S \qquad \text{AISC-LRFD (F1-7)}$$

Beam buckling factors, X_1 and X_2:

$$X_1 = \frac{\pi}{S_x}\sqrt{\frac{EGJA}{2}} \qquad \text{AISC-LRFD (F1-8)}$$

$$X_2 = 4\frac{C_w}{I_y}\left(\frac{S_x}{GJ}\right)^2 \qquad \text{AISC-LRFD (F1-9)}$$

F_L is the smaller of the yield stress in the flange minus compressive residual stresses (10 ksi for rolled shapes) or web yield stress. AISC-LRFD §F1.2a

$$F_L = (50\,\text{ksi} - 10\,\text{ksi}) = 40\,\text{ksi}$$

$$L_r = \frac{r_y X_1}{F_L}\sqrt{1+\sqrt{1+X_2 F_L{}^2}} = \frac{(3.26)(2{,}543)}{(40\,\text{ksi})}\sqrt{1+\sqrt{1+(0.00375)(40\,\text{ksi})^2}} = 396$$

$$M_r = F_L S_x = (40\,\text{ksi})(503\,\text{in.}^3) = 20{,}108\,\text{k-in.}$$

$$M_n = C_b\left[M_p - (M_p - M_r)\left(\frac{L_b - L_p}{L_r - L_p}\right)\right]$$

$$= 1.0\left[28{,}350 - (28{,}350 - 20{,}108)\left(\frac{120'' - 138''}{396'' - 138''}\right)\right]$$

$$= 28{,}933\ \text{k-in.} \geq M_p = 28{,}350\,\text{k-in.}$$

$$\therefore M_n = 28{,}350\,\text{k-in.}$$

$$R_y M_n = 1.3(28{,}350\,\text{k-in.}) = 36{,}855\,\text{k-in.}$$

Comparison of lateral torsional buckling moment with plastic yield moment indicates that plastic yield moment is the controlling yield behavior. AISC-LRFD Section H, combined axial plus bending interaction equations are as follows:

For the case:

$$\frac{P_u}{\phi_c R_y P_n} \geq 0.2 \qquad \text{AISC-LRFD (H1-1a)}$$

$$\frac{P_u}{\phi_c R_y P_n} + \frac{8}{9}\frac{M_{ux}}{\phi_b R_y M_{nx}} \leq 1.0$$

For the case:

$$\frac{P_u}{\phi_c R_y P_n} < 0.2 \qquad \text{AISC-LRFD (H1-1b)}$$

$$\frac{P_u}{2\phi_c R_y P_n} + \frac{M_{ux}}{\phi_b R_y M_{nx}} \leq 1.0$$

Thus, for this Design Example:

$$\frac{P_u}{\phi_c R_y P_n} = \frac{712\,\text{kips}}{0.85(3{,}078\,\text{kips})} = 0.27 \geq 0.2$$

$$\frac{P_u}{\phi_c R_y P_n} + \frac{8}{9}\frac{M_{ux}}{\phi_b R_y M_{nx}} = \frac{712\,\text{kips}}{(0.85)(3{,}078\,\text{kips})} + \left(\frac{8}{9}\right)\frac{26{,}443\,\text{k}-\text{in.}}{0.90(36{,}855\,\text{k}-\text{in.})} = 0.98 \le 1.0$$

$\therefore$ *o.k.*

Therefore, $W27\times178$ beam outside the link is okay. The EBF beams above Level 2 require cover plates and thus utilize combined section properties in the above equations.

6I. Beam stiffeners. AISC-Seismic §15.3

There are two types of stiffeners required in links: 1.) link stiffeners at ends at brace connections; and 2.) intermediate stiffeners. These are shown in Figure 2-7.

Link end stiffeners.

Full depth web stiffeners are required on both sides of the link beam at the brace connections. The stiffeners are used to prevent web buckling and to ensure ductile shear yielding of the web.

The stiffeners shall have a combined width not less than b_f - $2t_w$ and a thickness not less than $0.75t_w$ or 3/8 inch, whichever is larger. For the $W27\times178$ beam:

$$b_f - 2t_w = 14.09'' - 2(0.73'') = 12.63'' \text{ use } 2\times6.375''$$ AISC-Seismic §15.3a

The minimum thickness of the stiffeners is:

$$0.75t_w = 0.75(0.73'') = 0.548'' \text{ use } 5/8'' \text{ stiffeners}$$

$\therefore$ Use 6 3/8 in. × 5/8 in. stiffeners each side of beam (total 4)

Intermediate stiffeners.

AISC-Seismic §15.3b requires intermediate full depth web stiffeners (Figure 2-7) where link lengths are $5V_p/M_p$ or less.

Where link lengths are $1.6V_p/M_p$ or less, the spacing shall not exceed $30t_w - d_w/5$ for link rotation of 0.08 radians and $52t_w - d_w/5$ for link rotations of 0.02 radians. Linear interpolation may be used between link rotations of 0.02 and 0.08 radians. Thus,

$$30t_w - \frac{d}{5} = 30(0.73") - \left(\frac{27.81"}{5}\right) = 16.33 \text{ in.}$$ AISC-Seismic §15.3b

$$52t_w - \frac{d}{5} = 52(0.73") - \left(\frac{27.81"}{5}\right) = 32.43 \text{ in.}$$ AISC-Seismic §15.3b

Since the link rotation is 0.040 radians for the beam, interpolation must be used to determine the maximum spacing of intermediate stiffeners. This is shown below.

$$\left[\frac{0.080\,\text{rad} - 0.040\,\text{rad}}{0.080\,\text{rad} - 0.020\,\text{rad}}\right](32.43" - 16.33") + 16.33" = 27.0 \text{ in.}$$

Since the link length is 72 inches, therefore use three equal spacings of 24 inches.

Since the link beam is a $W27$, stiffener depth is 27.81 in. – 2 (1.19 in.) = 25.4 in. Under §15.3b, Item 5, AISC-Seismic, intermediate stiffeners of depth greater than 25 inches are required to be placed on both sides of the beam. One-sided stiffeners are required for depths less than 25 inches. The width shall not be less than

$$b_f/2 - t_w = 12.44"/2 - .650" = 5.57 \text{ in.}$$

Therefore use 6 3/8 in. × 5/8 in. stiffeners on both sides of the beam.

Web stiffener welds.

The web stiffener welds are required to develop a stiffener force of

$$A_{st}F_y = (6.375")(0.625")(50\,\text{ksi}) = 199\,\text{kips}$$ AISC-Seismic §15.3c

The minimum size of fillet weld, per AISC-LRFD Table J2.4, is ¼-inch to the link web and 5/16-inch to the link flange. Using E70XX electrodes and 5/16-inch fillet welds each side, the weld capacity is $0.6F_{EXX}$. The required weld length on the beam web is:

$$1_{required} = \frac{199\,\text{kips}}{0.60(70\,\text{ksi})(2 \times 5/16")(.707)} = 10.72 \text{ in.}$$

Therefore, use 5/16-inch fillet welds, both sides of the stiffener, at flanges and web.

Note: One-fourth of the above required weld is required at the flanges.

6m. Tabulated link beam design.

Tables 2-12a through 2-12h present tabular calculations that show the results from procedures in Parts 6a through 6l applied to all beams in the frame EBF4. The link beam design for all levels is as shown below in tabular form following the equations given above (each row/level is a continuation of the table above).

Table 2-12a. Link beam section properties

Level	Link Beam	e	a	h	F_y	A	b_f	t_f	d	t_w	A_{web} $t_w(d-2t_r)$	Size
R	W14X38	32	164	144	50	11.20	6.77	0.52	14.10	0.31	4.05	**o.k.**
5	W16X89	48	156	144	50	26.20	10.37	0.88	16.75	0.53	7.88	**o.k.**
4	W21X111	56	152	144	50	32.70	12.34	0.88	21.51	0.55	10.87	**o.k.**
3	W21X122	56	152	144	50	35.90	12.39	0.96	21.68	0.60	11.86	**o.k.**
2	W27X178	66	147	168	50	52.30	14.09	1.19	27.81	0.73	18.44	**o.k.**

Table 2-12a. Link beam section properties (continued)

Level	Link Beam	A_f	Z_f	Z_x	I_x	S_x	r_x	I_y	S_y	r_y	J	C_w
R	W14X38	7.0	47.4	61.5	385.0	54.6	5.86	26.7	7.89	1.54	0.80	1,230
5	W16X89	18.1	144.0	175.0	1,300.0	155.0	7.04	163.0	31.45	2.49	5.45	10,200
4	W21X111	21.6	222.8	279.0	2,670.0	249.0	9.04	274.0	44.41	2.89	6.83	29,200
3	W21X122	23.8	246.5	307.0	2,960.0	273.0	9.08	305.0	49.23	2.91	8.98	32,700
2	W27X178	33.5	446.2	567.0	6,990.0	502.0	11.56	555.0	78.81	3.26	19.50	98,300

Table 2-12b. Combined section properties (beams plus cover plates)

Level	Link Beam	Plate b	t	A_t	Z_x	Z_f	I_x	S_x	r_y	I_y	J	C_w	X_1	X_2
R	W14X38	6	0.375	16	94	80	621	84	1.60	40	0.8	1,230	1,697	0.01065
5	W16X89	6	0.250	29	201	169	1517	176	2.43	172	5.5	10,200	2,872	0.00197
4	W21X111	6	0.250	36	312	255	3025	275	2.82	283	6.8	29,200	2,274	0.00533
3	W21X122	6	0.250	39	340	279	3321	299	2.84	314	9.0	32,700	2,499	0.00369
2	W27X178	0	0.000	52	567	446	6990	503	3.26	555	19.5	98,300	2,543	0.00375

Table 2-12c. Compact flange, web

Level	ϕV_p	Ω	M_p	$\frac{\phi V_p}{M_p}$	$b\frac{b_f}{2t_f}$	Comp. Flange Limit	Comp. Flange Results	$\frac{1.1R_y}{M_p/V_p}$	P_u	P_y	$\frac{P_u}{\phi P_n}$	$\frac{h}{t_w}$	Comp. Web Limits	Comp. Web Results
R	109.4	1.15	3,075	**1.26**	6.57	7.35	**o.k.**	34.0	130.97	560.00	0.28	42.2	55.5	**o.k.**
5	212.6	1.22	8,750	**1.30**	5.92	7.35	**o.k.**	49.8	224.13	1,310.00	0.20	28.6	57.5	**o.k.**
4	293.4	1.25	13,950	**1.31**	7.05	7.35	**o.k.**	57.5	293.69	1,635.00	0.21	35.9	57.2	**o.k.**
3	320.1	1.27	15,350	**1.30**	6.45	7.35	**o.k.**	58.0	340.24	1,795.00	0.22	32.9	56.9	**o.k.**
2	497.8	1.33	28,350	**1.29**	5.92	7.35	**o.k.**	68.9	364.21	2,615.00	0.16	35.1	58.5	**o.k.**

Table 2-12d. Combined link stresses, unsupported length

Level	Shear Above Level	F_i	P_{max} Link Beam	P_{link}	M_{link}	Comb Link Loads	Allow. Link Stress	Link Result	V_{pa}	M_{pa}	$\frac{2\phi M_{pa}}{2}$	V_u	Value	L_u max.
R	0	131.0	131.0	16.4	1,944.8	**42.2**	50	**o.k.**	106.4	2,780	156.4	106.4	1.14	**72.8**
5	229.2	109.5	224.1	15.3	5,670.0	**39.8**	50	**o.k.**	209.5	8,558	320.9	209.5	1.17	**111.4**
4	420.9	83.2	293.7	13.7	9,129.1	**41.3**	50	**o.k.**	288.7	13,504	434.1	288.7	1.18	**132.6**
3	566.6	57.0	340.2	12.0	9,959.0	**40.7**	50	**o.k.**	314.3	14,680	471.8	314.3	1.17	**133.2**
2	666.2	31.1	364.2	10.5	18,252.4	**41.1**	50	**o.k.**	492.9	28,794	785.3	492.9	1.16	**151.4**

Table 2-12e. Beam outside link, design forces

Level	$P_{u,1.0E_h}$	$M_{u,SEISMIC}$ $V_p e/2$	Ω	Beam Overstr. Factor	$P_{u,D+L}$ 1.465D+ 0.5L	$M_{u,D+L}$ 1.465D+ 0.5L	Beam Overstr. Factor	R_y	P_{bu} (kips)	P_{bu} (k-in.)
R	131	1,945	1.15	1.10	2.0	342.0	1.10	1.3	217	3,157
5	224	5,670	1.22	1.10	12.0	359.0	1.10	1.3	403	8,503
4	294	9,129	1.25	1.10	17.0	303.0	1.10	1.3	542	13,388
3	340	9,959	1.27	1.10	17.4	318.0	1.10	1.3	638	14,591
2	364	18,252	1.33	1.10	17.6	307.0	1.10	1.3	712	26,439

Table 2-12f. Axial compression parameters

Level	Section	L_u (ft)	kl/r_y	λ_c	F_{cr} (ksi)	ϕ_c	P_n (kips)	$R_y P_n$ (kips)
R	W14X38	10	75.0	0.991	33.14	0.85	520	676
5	W16X89	10	49.4	0.653	41.82	0.85	1,221	1,587
4	W21X111	10	42.6	0.563	43.78	0.85	1,563	2,032
3	W21X122	10	42.2	0.558	43.89	0.85	1,707	2,219
2	W27X178	10	36.8	0.487	45.28	0.85	2,368	3,078

Table 2-12g. Flexural strength parameters and combined axial plus bending results (LTB=lateral torsional buckling yield mode)

Level	ϕ_b	$M_n = M_p$ (k-in.)	C_b LTB	L_b (in.)	L_p (in.)	X_1	X_2	F_L (ksi)	L_r (in.)	M_r (k-in.)	M_n LTB (k-in.)	M_n (k-in.)	$R_y M_n$ (k-in.)	$\frac{P_u}{\phi R_y P_n}$	AISC-LRFD H1-1a	AISC-LRFD H1-1b
R	0.9	4,703	1.0	120	68	1,697	0.01065	40	156	3,344	3,895	3,895	5,064	0.38	**0.99**	**NA**
5	0.9	10,025	1.0	120	103	2,872	0.00197	40	304	7,034	9,771	9,771	12,703	0.30	**0.96**	**NA**
4	0.9	15,582	1.0	120	119	2,274	0.00533	40	324	10,995	15,569	15,570	20,241	0.31	**0.97**	**NA**
3	0.9	16,994	1.0	120	121	2,499	0.00369	40	338	11,977	17,007	16,995	22,093	0.34	**0.99**	**NA**
2	0.9	28,350	1.0	120	138	2,543	0.00375	40	396	20,108	28,933	28,350	36,855	0.27	**0.98**	**NA**

Table 2-12h. Link rotations

Level	Δ_S	Story Drift Δ_S	Story Δ_M (i.n)	h (in.)	a (in.)	e (in.)	**Rot θ (rad)**
R	1.21	0.20	0.98	144	164	32	**0.0766**
5	1.01	0.23	1.13	144	156	48	**0.0587**
4	0.78	0.25	1.23	144	152	56	**0.0547**
3	0.53	0.25	1.23	144	152	56	**0.0547**
2	0.28	0.28	1.37	180	147	66	**0.0416**

6n. AISC-Seismic brace design. §15.6, AISC-Seismic

The braces are required to be designed for $1.25R_yV_p$ times the yielding link strength plus 1.25 times gravity load combinations.

$$P_E = 1.25\Omega R_y\ P_{computer} \text{ due to } E_h \text{ loads.}$$

$$M_E = 1.25R_yV_pe/2$$

Using strength design procedures outlined in AISC-LRFD Section H, obtaining forces from a computer analysis, and showing calculations in tabular form (Tables 2-13a through 2-13e), the design forces for braces (P and M) are calculated. Column shear forces are not a controlling factor and are not shown for the sake of brevity.

Table 2-13a. Brace section properties

Level	Section	A (in.^{2})	Z_x (in.^{3})	S_x (in.^{3})	L (ft)	r_x (in.)	r_y (in.)	kl/r_y	F_y (ksi)
5	W12X87	26	132	118	18	5.38	3.07	71.4	50
4	W12X152	45	243	209	18	5.66	3.19	68.7	50
3	W12X210	62	348	292	18	5.88	3.28	66.8	50
2	W12X230	68	386	321	18	5.98	3.31	65.5	50
1	W12X252	74	428	353	19	6.06	3.34	68.6	50

Table 2-13b. Brace design loads

Level	Section	P_E	M_E	Ω	Overstr. Factor	$P_{gravity}$ 1.465D+ 0.5L	$M_{gravity}$ 1.465D+ 0.5L	Overstr. Factor	R_y	P_{bu} design	M_{bu} design
R	W12X87	150	1,512	1.15	1.25	18.0	276.0	1.25	1.3	303	3,168
5	W12X72	276	3,036	1.22	1.25	24.0	247.0	1.25	1.3	575	6,309
4	W12X79	378	3,744	1.25	1.25	24.0	180.0	1.25	1.3	796	7,811
3	W12X106	446	4,200	1.27	1.25	25.0	181.0	1.25	1.3	953	8,903
2	W12X120	565	3,996	1.33	1.25	25.0	105.0	1.25	1.3	1,253	8,770

Table 2-13c. Brace axial design parameters

Level	Section	L_u (ft)	kl/r_y	λ_c	F_{cr} (ksi)	ϕ_c	P_n (kips)
R	W12X87	18	71.4	0.943	34.45	0.85	881.9
5	W12X72	18	68.7	0.908	35.40	0.85	1,582.4
4	W12X79	18	66.8	0.883	36.08	0.85	2,229.5
3	W12X106	18	65.5	0.865	36.55	0.85	2,474.5
2	W12X120	19	68.6	0.906	35.46	0.85	2,627.3

Table 2-13d. Brace bending design parameters

Level	ϕ_b (ksi)	$M_n = M_p$ (k-in.)	C_b (kips)	L_b (in.)	L_p (in.)	X_1	X_2	F_L (k-in.)	L_r	M_r (k-in.)	M_n (k-in.)
	0.9	6,600.0	1.0	219	130	3,869	0.0006	40	459	4,720	6,092.5
5	0.9	12,150.0	1.0	219	135	3,225	0.0012	40	423	8,360	11,045.1
4	0.9	17,400.0	1.0	219	139	3,524	0.0008	40	460	11,680	15,974.5
3	0.9	19,300.0	1.0	217	140	4,650	0.0003	40	572	12,840	18,158.5
2	0.9	21,400.0	1.0	229	142	5,231	0.0002	40	639	14,120	20,120.9

Table 2-13e. Brace, combined axial plus bending results

Level	Section	$\frac{P_u}{\phi P_n}$	AISC LRFD H1-1a	AISC LRFD H1-1b
5	W12X87	0.40	**0.92**	**NA**
4	W12X152	0.43	**0.99**	**NA**
3	W12X210	0.42	**0.90**	**NA**
2	W12X230	0.45	**0.94**	**NA**
1	W12X252	0.56	**0.99**	**NA**

6o. AISC-Seismic column design. AISC-Seismic §15.8

The design of the columns for frame EBF4 for the requirements of AISC-Seismic is shown in Tables 2-14a through 2-14e. The columns are required to resist an axial force corresponding to $1.1R_yV_n$, which is the shear strength of the links to ensure that the yielding mechanism is within the link beams. Design forces (P and P) are calculated as $1.1\Omega R_y$ times seismic forces plus 1.1 times factored gravity load combinations. Column shear forces are not a controlling factor and are not shown for the sake of brevity.

Table 2-14a. Column, section properties

Level	Section	A (in.^{2})	Z_x (in.^{3})	S_x (in.^{3})	L (ft)	r_x (in.)	r_y (in.)	kl/r_y	F_y (ksi)
5	W12X87	26	132	118	18	5.38	3.07	71.4	50
4	W12X87	26	132	118	18	5.38	3.07	71.4	50
3	W12X87	26	132	118	18	5.38	3.07	71.4	50
2	W12X170	50	275	235	18	5.74	3.22	67.4	50
1	W12X170	50	275	235	19	5.74	3.22	71.3	50

Table 2-14b. Column, design loads

Level	Section	P_E	M_E	Ω	Overstr. Factor	$P_{gravity}$ 1.465D+ 0.5L	$M_{gravity}$ 1.465D+ 0.5L	Overstr. Factor	R_y	P_{bu} design	M_{bu} design
R	W12X87	0	276	1.15	1.10	4.0	168.0	1.10	1.3	4	638
5	W12X87	84	432	1.22	1.10	22.0	180.0	1.10	1.3	170	949
4	W12X87	238	504	1.25	1.10	44.0	144.0	1.10	1.3	473	1,057
3	W12X170	458	552	1.27	1.10	67.0	120.0	1.10	1.3	906	1,136
2	W12X170	683	972	1.33	1.10	87.0	60.0	1.10	1.3	1,395	1,915

Table 2-14c. Column, axial design parameters

Level	Section	L_u (ft)	kl/r_y	λ_c	F_{cr} (ksi)	ϕ_c	P_n (kips)
R	W12X87	12	46.9	0.620	42.56	0.85	1,089.6
5	W12X87	12	46.9	0.620	42.56	0.85	1,089.6
4	W12X87	12	46.9	0.620	42.56	0.85	1,089.6
3	W12X170	12	44.8	0.592	43.18	0.85	2,159.0
2	W12X170	15	56.0	0.740	39.76	0.85	1,988.1

Table 2-14d. Column, bending design parameters

Level	ϕ_b (ksi)	$M_n = M_p$ (k-in.)	C_b (kips)	L_b (in.)	L_p (in.)	X_1	X_2	F_L (k-in.)	L_r	M_r (k-in.)	M_n (k-in.)	M_n (k-in.)
R	0.9	6,600.0	1.0	144	130	3,869	0.0006	40	459	4,720	6,521.0	6,521
5	0.9	6,600.0	1.0	144	130	3,869	0.0006	40	459	4,720	6,521.0	6,521
4	0.9	6,600.0	1.0	144	130	3,869	0.0006	40	459	4,720	6,521.0	6,521
3	0.9	13,750.0	1.0	144	136	7,173	0.0001	40	824	9,400	13,702.1	13,702
2	0.9	13,750.0	1.0	180	136	7,173	0.0001	40	824	9,400	13,474.4	13,474

Table 2-14e. Column, combined axial plus bending results

Level	Section	$\frac{P_u}{\phi P_n}$	AISC LRFD H1-1a	AISC LRFD H1-1b
5	W12X87	0.00	**NA**	**0.11**
4	W12X87	0.18	**NA**	**0.25**
3	W12X87	0.51	**0.67**	**NA**
2	W12X170	0.49	**0.58**	**NA**
1	W12X170	0.83	**0.97**	**NA**

6p. Final frame member sizes (LRFD).

Table 2-15. Final frame member sizes for EBF4 (LRFD)

Level	Beams	Links (in.)	Beam Cover Plate (in.) (1)	Columns	Braces
Roof	W14x38	32	6 x ¼		
5	W16x89	48	6 x ¼	W12X65	W12X87
4	W21x111	56	6 x ¼	W12X65	W12X87
3	W21x122	56	6 x ¼	W12X65	W12X87
2	W27x178	66	Not req'd	W12X87	W12X106
1				W12X87	W12X120

Note:
1. Top and bottom flanges outside link.

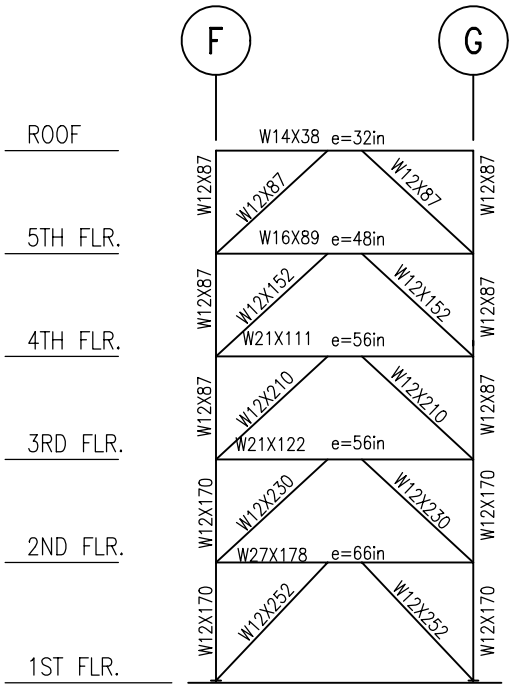

Figure 2-6. EBF4 Frame member sizes (LRFD)

7. Typical EBF details.

Figures 2-7 through 2-14 are examples of typical EBF connection details. These are shown for both wide-flange and tube section braces.

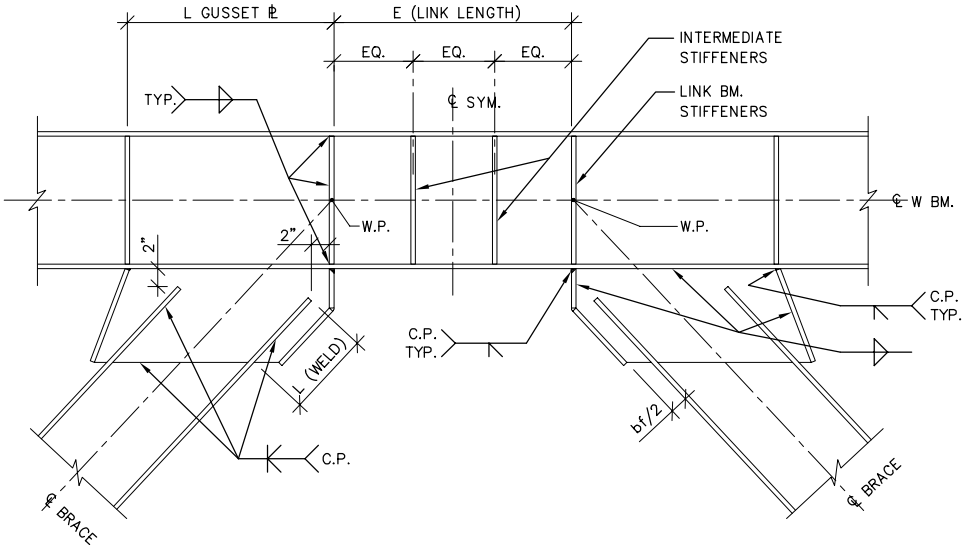

Figure 2-7. EBF brace-beam connection at link using wide flange brace

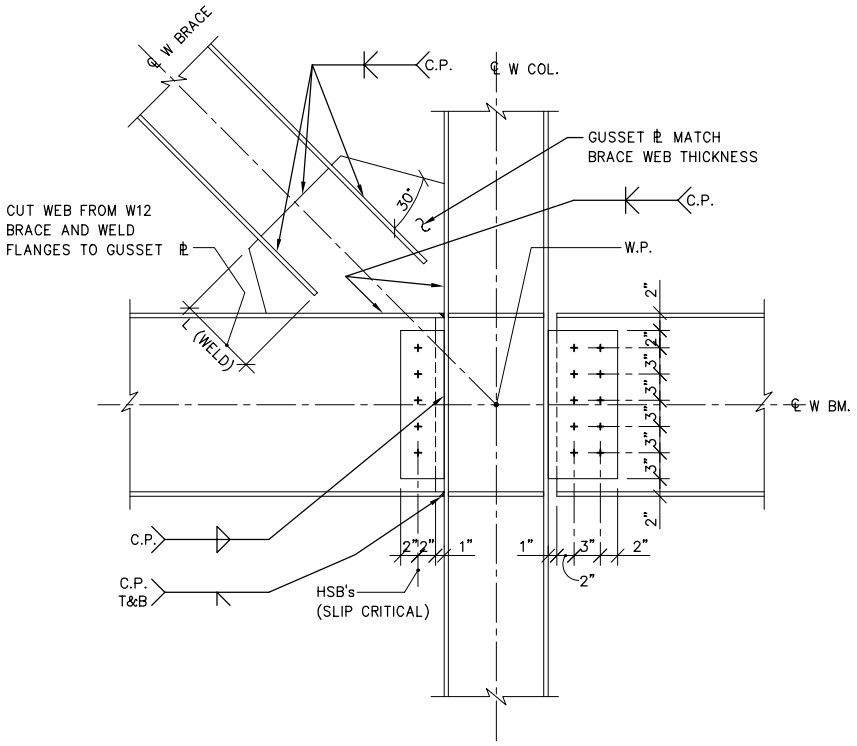

Figure 2-8. EBF brace-column connection using wide flange brace

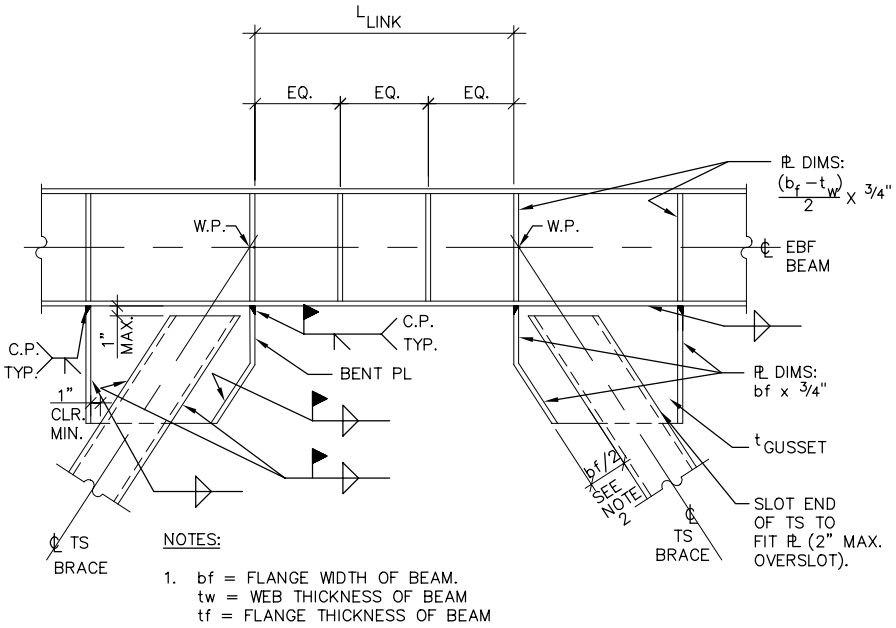

Figure 2-9. EBF beam-brace connection at link using TS brace

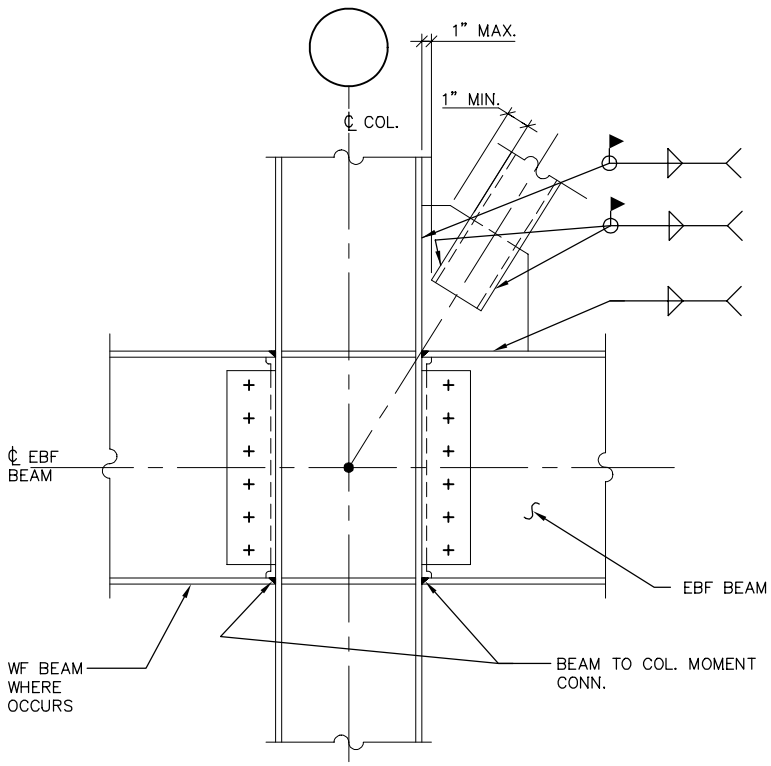

Figure 2-10. Brace-beam connection with TS brace

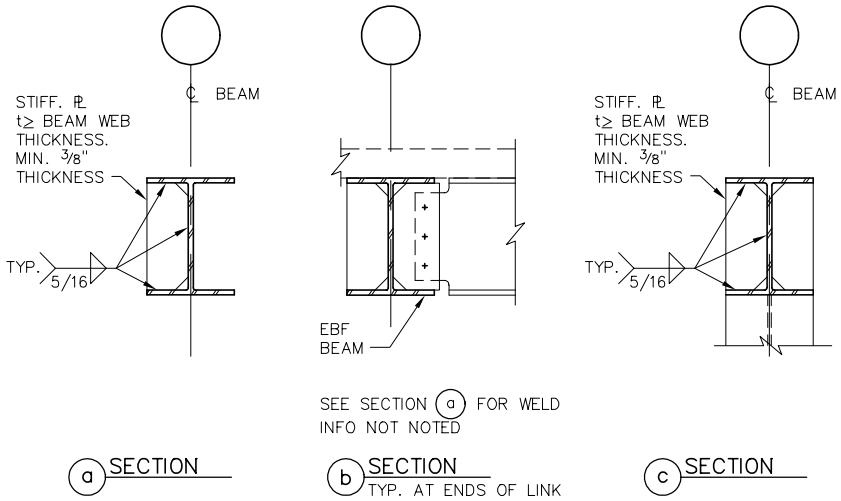

Figure 2-11. EBF stiffeners at links

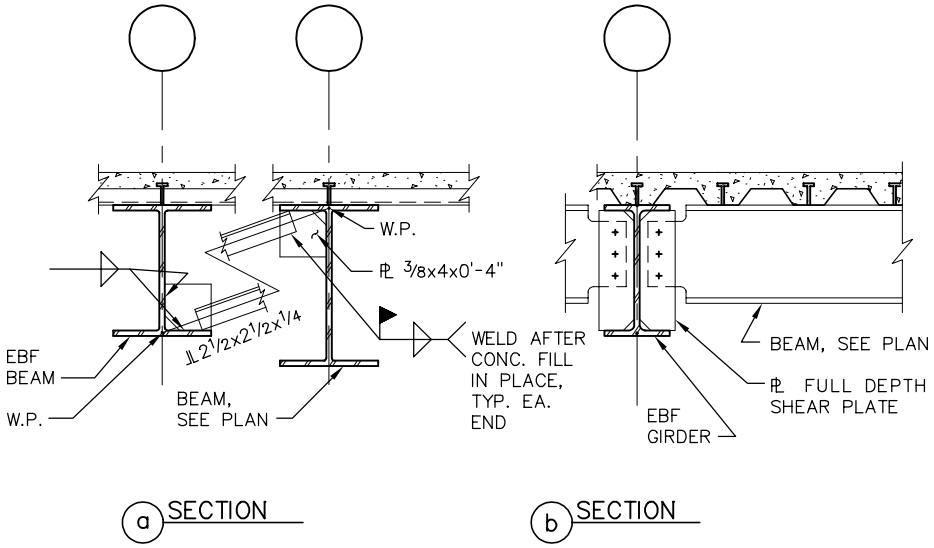

Figure 2-12. EBF beam stability bracing

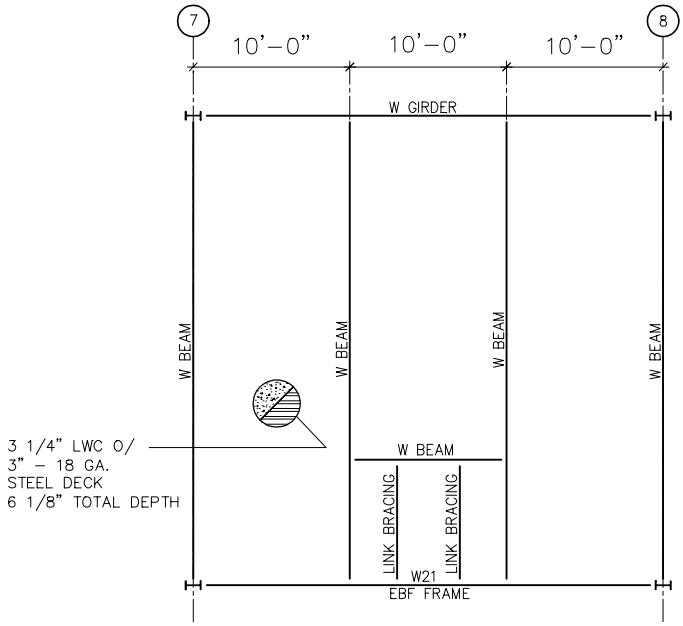

Figure 2-13. Partial plan of EBF beam stability bracing

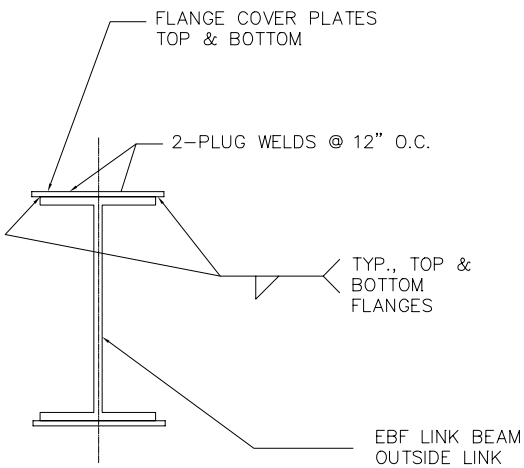

Figure 2-14. Link beam cover plates (beam outside the link)

Commentary

EBF frames are considered a quality seismic system because of their ability to yield with a known behavior at controllable locations and to demonstrate very good hysteretic behavior during cyclical loading. The possibility exists of discrete postearthquake repairs in local areas if yielding of a frame occurs in an earthquake. The construction of these frames is not difficult, and the cost is only slightly greater than the cost of special concentric braced frame systems.

As can be seen, the LRFD design in accordance with AISC-Seismic yields more conservative results. However, the provisions of AISC-Seismic are considered state-of-the-art and more likely to yield an EBF frame with the superior performance that is expected of EBF systems.

It was found that by designing an EBF link beam that meets all of the most desirable attributes of EBF design, that the beam outside the link might require cover plates to achieve the required strength. The designer will struggle with optimization of the link design and the requirement for cover plates outside the link. It is believed that optimization of the link is the most important element in the system and if cover plates are required outside the link, that is a cost worth paying. In the ASD example, the link lengths (to $1.3V_s/M_s$), were not optimized and thus did not need cover plates. However, from a performance standpoint, the ASD frame may not be as good a design as the LRFD frame because its link lengths are much shorter.

References

Becker and Ishler, "Seismic Design Practice for Eccentrically Braced Frames, Based on the 1994 UBC," *Steel Tips*. Structural Steel Educational Council, Moraga, California, December 1996.

Popov, Kasai, and Engelhardt, 1987. "Advances in Design of Eccentrically Braced Frames," *Earthquake Spectra*. Earthquake Engineering Research Institute, Oakland, California, Vol.3, no.1.

Engelhardt and Popov, 1989. "On Design of Eccentrically Braced Frames," *Earthquake Spectra*. Earthquake Engineering Research Institute, Oakland, California, Vol. 5, No. 3.

Popov, Engelhardt, and Ricles, 1989. "Eccentrically Braced Frames: US Practice," *Engineering Journal*. American Society of Civil Engineers, Reston, Virginia, AISC, 2nd quarter.

Kasai and Popov, 1986. "General Behavior of WF Steel Shear Link Beams," *Journal of Structural Engineering*. American Society of Civil Engineers, Reston, Virginia, Vol. 112, no. 2.

Design Example 3A
Steel Special Moment Resisting Frame

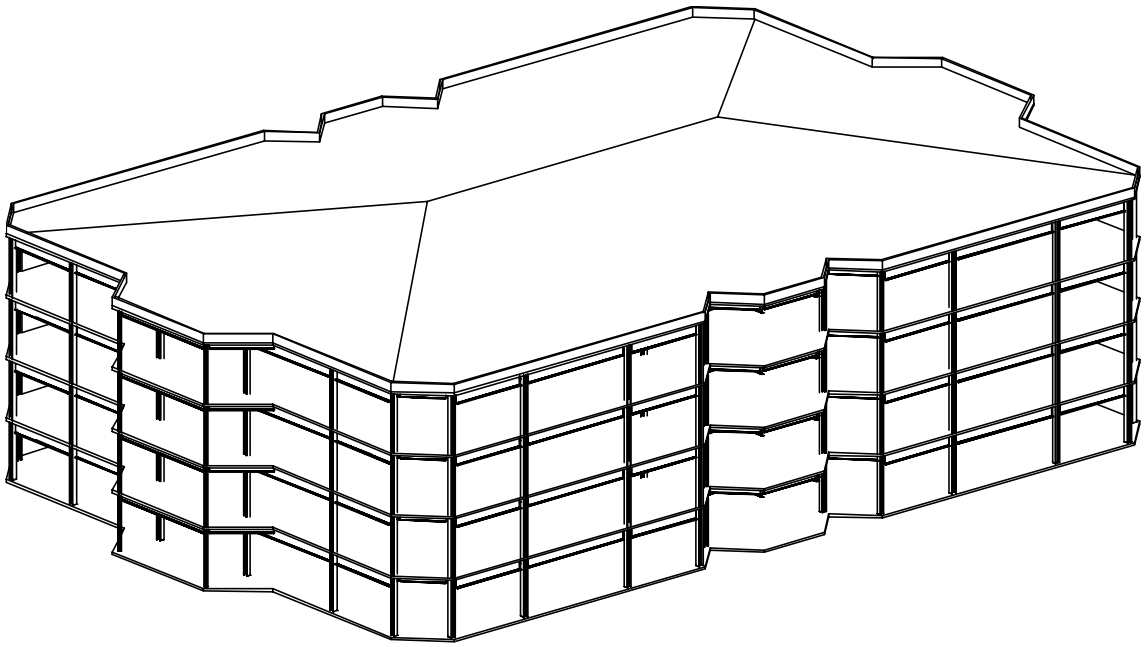

Figure 3A-1. Four-story steel office building with steel special moment resisting frames (SMRF)

Foreword

This Design Example illustrates use of the 1997 UBC provisions for design of a steel special moment resisting frame (SMRF). During the course of the development of this Volume III, an intensive steel moment frame research program, including considerable full-scale testing, was conducted by the SAC project. As a result of this effort, new SAC guidelines have been developed. However, these came after the finalization of this Design Example. Consequently, the SMRF example given in this document shows only 1997 UBC and FEMA-267/267A methodology. With the help of member of the SAC team, comments have been added to this Design Example indicating where the anticipated new SAC guidelines will be different than the methodology shown in this Design Example.

Overview

Since the 1994 Northridge earthquake, the prior design procedures for steel moment resisting frames have been subject to criticism, re-evaluation, and intensive reseach. Given the observed earthquake damage attributed to brittle connection fractures in the 1994 Northridge earthquake, it was determined that the 1994 UBC requirements for moment resisting joint design were inadequate and should not continue to be used in new construction. In September 1994, the International Conference of Building Officials (ICBO) issued an emergency code amendment that eliminated the prescriptive code design procedures for special moment resisting frame (SMRF) beam-column connections. Those procedures were replaced with code language requiring qualification of SMRF connection design through prototype testing or calculation. A SMRF conection is now required to demonstrate *by testing or calculation* the capacity to meet both the strength and inelastic rotation performance as specified by 1997 UBC §2213.7.1.

To address the research needs precipitated by the SMRF connection concerns, the SAC Joint Venture was formed by SEAOC, the Applied Technology Council (ATC), and the California Universities for Research in Earthquake Engneering (CUREe). SAC was charged with developing interim recommendations for professional practice, including design guidelines for use in new SMRF connections. To this end, FEMA-267, *Interim Guidelines: Evaluation, Repair, Modification and Design of Welded Steel Moment Frame Structures* was published in August, 1995. This was followed by FEMA-267A, *Interim Guidelines; Advisory No. 1*, published in March, 1997.

As a prelude to possible future code requirements, FEMA-267A offers design procedures and calculation methodologies for certain SMRF connection configurations. While these procedures are subject to further refinement, they represent the current state of practice for SMRF connection design. This Design Example follows the procedures as presented in FEMA-267A, with the reduced beam section (RBS) the selected joint configuration. Test results for the RBS joint configuration indicate that it provides the requisite inelastic rotation capacity, and is one of the more cost-effective of the current SMRF connection options.

Following publication of the FEMA-267 series, the SAC Joint Venture entered into a supplemental contract with FEMA to perform additional research and develop final design guidelines. That work, recently completed, culminated with the publication of FEMA-350, *Recommended Seismic Design Criteria for New Moment Resisting Steel Frame Structures*. FEMA-350 will present design details and criteria for ten different types of connections that are prequalified for use within certain limits. The FEMA-350 criteria are similar, but not identical, to those illustrated here.

The 4-story steel office structure shown in Figure 3A-1 is to have special moment resisting frames as its lateral force resisting system. The typical floor plan is shown on Figure 3A-2 and the moment frame elevation is provided in Figure 3A-3 at the end of this Design Example.

Outline

This Design Example illustrates the following parts of the design process.

1. **Design base shear.**
2. **Distribution of lateral forces.**
3. **Interstory drifts.**
4. **Typical diaphragm design.**
5. **SMRF member design.**
6. **SMRF beam-column connection design.**

Given Information

The following information is given:

Roof weights:

Roofing	4.0 psf
Insulation	2.0
Concrete fill on metal deck	44.0
Ceiling	3.0
Mechanical/electrical	4.0
Steel framing	6.0
Total	63.0 psf

Floor weights:

Floor covering	1.0 psf
Concrete fill on metal deck	44.0
Ceiling	3.0
Mechanical/electrical	5.0
Steel framing	9.0
Partitions (seismic DL)	10.0
Total	76.0 psf

Live load: 20.0 psf

Live load: 80.0 psf

Exterior wall system weight: steel studs, gypsum board, fascia panels 20.0 psf

Site seismic and geotechnical data:

Occupancy category:	Standard Occupancy Structure	§1629.2
Seismic importance factor:	I = 1.0	Table 16-K
Soil profile type:	Type S_D (default profile)	§1629.3, Table 16-J
Seismic Zone:	Zone 4, $Z = 0.40$	§1629.4.1, Table 16-I
Seismic source type:	Type C	§1629.4.2
Distance to seismic source:	10 km	Table 16-S
Near source factors:	$N_a = 1.0$	Table 16-T
	$N_v = 1.0$	Table 16-U

Structural materials:

Wide flange shapes	ASTM A572, Grade 50 $\left(f_y = 50\,\text{ksi}\right)$
Plates	ASTM A572, Grade 50
Weld electrodes	E70XX

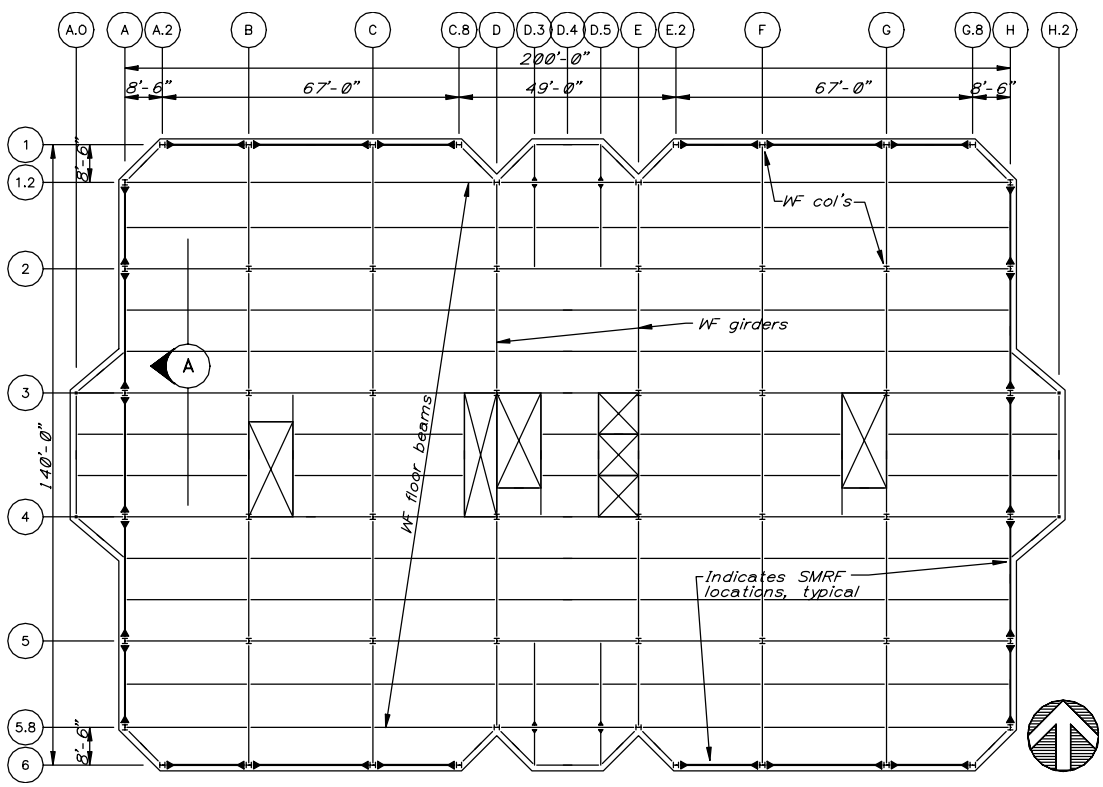

Figure 3A-2. Typical floor framing plan

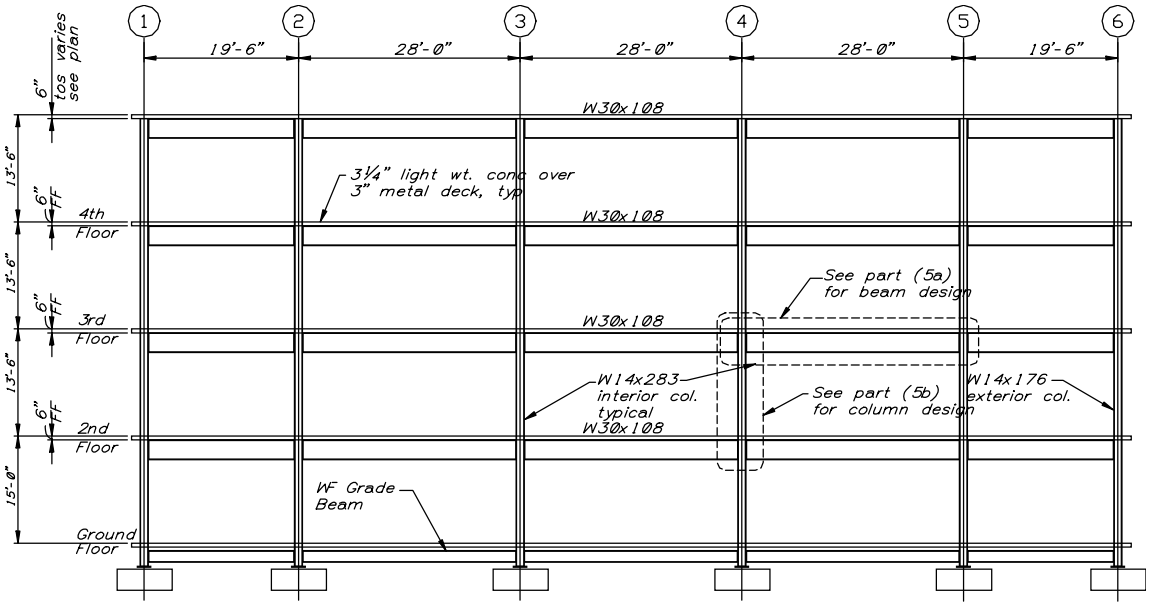

Figure 3A-3. Frame elevation at Line A

Calculations and Discussion — Code Reference

.

1. **Design base shear.**

1a. **Check configuration requirements.** **§1629.5**

Check the structure for vertical and horizontal irregularities.

Vertical irregularities—review Table 16-L. Table 16-L

By observation, the structure has *no vertical irregularities*. The moment frames have no discontinuities or offsets, and the mass is similar at all levels.

Plan irregularities—review Table 16-M. Table 16-M

The floor plan has no re-entrant corners exceeding 15 percent of the plan dimension, nor are there any diaphragm discontinuities. Therefore, the structure has *no plan irregularities*.

1b. **Classify structural system and determine seismic factors.** **§1629.6**

The structure is a moment-resisting frame system with lateral resistance provided by steel special moment resisting frames (SMRF) (system type 3.1, Table 16-N). The seismic factors are:

$R = 8.5$ Table 16-N

$\Omega = 2.8$

$h_{max} = \text{no limit}$

1c. **Select lateral force procedure.** **§1629.8.3**

The static lateral force procedure will be used. This is permitted for regular structures not more than 240 feet in height.

1d. **Determine seismic response coefficients C_a and C_v.** **§1629.4.3**

For Zone 4 and Soil Profile Type S_D:

$C_a = 0.44(N_a) = 0.44(1.0) = \underline{\underline{0.44}}$ Table 16-Q

$C_v = 0.64(N_v) = 0.64(1.0) = \underline{\underline{0.64}}$ Table 16-R

1e. **Evaluate structure period T.** **§1630.2.2**

Per Method A: (30-8)

$T = C_t (h_n)^{3/4}$

$C_t = 0.035$

$T_A = 0.03(55.5)^{3/4} = 0.71\text{sec}$

Per Method B:

Using a computer model, in lieu of Eq. (30-10), with assumed member sizes and estimated building weights, the period is determined:

North-south (y):

$$T_{By} = 1.30 \text{ sec}$$ §1630.2.2 Para. #2

East-west (x):

$$T_{Bx} = 1.16 \text{ sec}$$

For Seismic Zone 4, the value for Method B cannot exceed 130 percent of the Method A period. Consequently,

$$\text{Maximum value for } T_B = 1.3T_A = 1.3(0.71) = \underline{\underline{0.92 \text{ sec}}}$$

1f. **Determine design base shear.** **§1630.2.1**

The total design base shear for a given direction is:

$$V = \frac{C_v I}{RT} W = \frac{0.64(1.0)}{8.5(0.92)} W = 0.082W \qquad (30\text{-}4)$$

The base shear need not exceed:

$$V = \frac{2.5C_a I}{R} W = \frac{2.5(0.44)(1.0)}{8.5} = 0.129W \qquad (30\text{-}5)$$

But the base shear shall not be less than:

$$V = 0.11C_a IW = 0.11(0.44)(1.0)W = 0.048W \qquad (30\text{-}6)$$

And for Zone 4, base shear shall not be less than:

$$V = \frac{0.8ZN_v I}{R} W = \frac{0.8(0.4)(1.0)(1.0)}{8.5} = 0.038W \qquad (30\text{-}7)$$

Equation (30-4) governs base shear.

$$\therefore V = \underline{\underline{0.082W}} \qquad (30\text{-}4)$$

Note that if the period from Method A $(T = 0.71\text{sec})$ was used, the base shear would be $V = 0.106W$. Method A is based on empirical relationships and is not considered as accurate as Method B. To avoid unconservative use of Method B, the code limits the period for Method B to not more than 1.3 times the Method A period.

1g. Determine earthquake load combinations. §1630.1

Section 1630.1.1 specifies earthquake loads. These are E and E_m as set forth in Equations (30-1) and (30-2).

$$E = \rho E_h + E_v \tag{30-1}$$

$$E_m = \Omega_o E_h \tag{30-2}$$

The normal earthquake design load is E. The load E_m is the estimated maximum earthquake force that can be developed in the structure. It is used only when specifically required, as will be shown later in this Design Example.

Before determining the earthquake forces for design, the reliability/redundancy factor must be determined.

Reliability/redundancy factor: $\rho = 2 - \dfrac{20}{r_{max}\sqrt{A_b}}$ (30-3)

A_b is the ground floor area of the structure. Note that per the exception in §1630.1, A_b may be taken as the average floor area in the upper setback portion in buildings with a larger ground floor area and a smaller upper floor area.

$$A_b = (140 \times 240) - 8(8.5)^2 / 2 = 33{,}311\,\text{ft}^2$$

The element story shear ratio r_i is the ratio of the story shear in the most heavily loaded single element over the total story shear at a given level i. The value for r_{max} is the greatest value for r_i occurring in any story in the lower two-thirds of the structure. In structures with setbacks or discontinuous frames, the value of r_i should be checked at each level. For this Design Example, the frames are uniform at all levels and will resist approximately the same relative lateral force at each story. For moment frames, r_i is taken as the maximum of the sum of the shears in any two adjacent columns in a moment frame bay, divided by the story shear. The exception is that for interior columns in multi-bay frames, 70 percent of the shear may be used in the column shear summation.

By observation, the moment frame with the highest total shear per bay will govern the value for r_{max}. For this Design Example, the design base shear is equal for both north-south and east-west directions. Referring to the floor framing plan (Figure 3A-2), the east-west direction has 16 moment frame columns, while the north-south direction has 12 moment frame columns; so the north-south r_{max} will be greatest. Although a different value of ρ may be used for each direction, the larger r_{max} will be used for both directions in this Design Example to be conservative.

Assume that the frames at Lines A and H each take half the story shear. Using the portal method for the frame at Line A (Figure 3A-4), the four interior columns take approximately 80 percent of the frame shear, and the two exterior columns 20 percent of the frame shear.

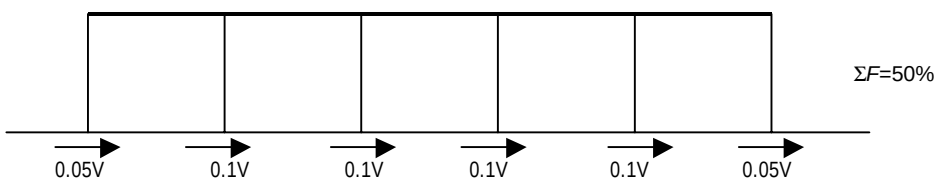

Figure 3A-4. Frame at Line A

At the exterior bay: $r_i = 0.05 + 0.7(0.1)/1.0 = 0.12$

At the interior bays: $r_i = 0.7(0.1 + 0.1)/1.0 = 0.14$

The interior bay governs with the larger value of r_i. Per the SEAOC Blue Book Commentary (§C105.1.1.1), r_i is to include the effects of torsion, so a 5 percent increase will be assumed.

$$r_{max} = 1.05(0.14) = \underline{\underline{0.147}}$$

$$\therefore \rho = 2 - \frac{20}{0.147(33{,}311)^{1/2}} = \underline{\underline{1.25}} \quad o.k. \tag{30-3}$$

Note that ρ cannot be less than 1.0, and that for SMRFs, ρ *cannot* exceed 1.25 per §1630.1.1. If necessary, moment frame bays must be added until this requirement is met.

For the load combinations per §1612, and anticipating using allowable stress design (ASD) in the frame design:

$$E = \rho E_h + E_v = 1.25(V) \ \ (E_v = 0 \text{ for allowable stress design}) \tag{30-1}$$

$$E_m = \Omega E_h = 2.8(V) \tag{30-2}$$

Note that seismic forces may be assumed to act nonconcurrently in each principal direction of the structure, except as per §1633.1. Although for this Design Example the same value of ρ is used in either direction, a different value of ρ may be used for each of the principal directions.

2. Distribution of lateral forces.

2a. Building weights and mass distribution.

Calculate the building weight and center of gravity at each level. Include an additional 90 kips (3.0 psf) at the roof level for estimated weight of mechanical equipment. Distribute the exterior curtain wall to each level by tributary height.

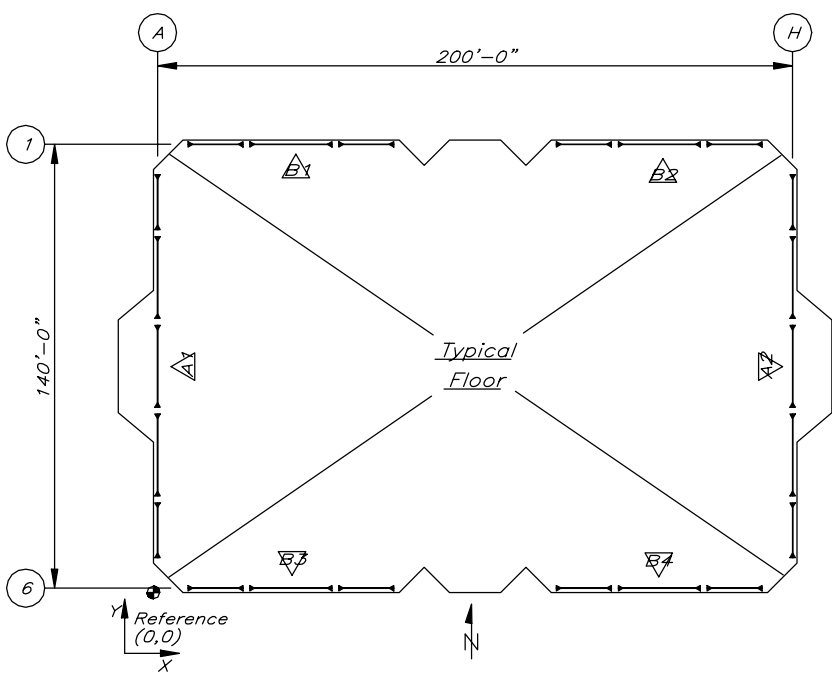

Figure 3A-5. Typical floor

Table 3A-1. Building mass properties

Roof Level Mass Properties Roof: $w_{DL} = 63.0 + 3.0_{add'lmech} = 66.0\,psf$; Exterior Walls: $w_{wall} = 20\,psf$; Wall Area = $(6.5 + 4.0)(696\,ft) = 7{,}308\,ft^2$							
Mark	w_{DL} *(psf)*	*Area (sf)*	W_i *(kips)*	X_{cg} *(ft)*	Y_{cg} *(ft)*	$W(X_{cg})$	$W(Y_{cg})$
Floor	66.0	29,090	1,920	100	70	191,994	134,396
Walls	20.0	7,308	146	100	70	14,616	10,231
Totals			2,066			206,610	144,627
	$X_{cg} = 206{,}610/2{,}066 = 100.0\,ft$; $Y_{cg} = 144{,}627/2{,}066 = 70.0\,ft$						
4th, 3rd, & 2nd Level Mass Properties *Floor:* $w_{DL} = 72.0\,psf$; *Exterior Walls:* $w_{wall} = 15\,psf$; *Wall Area* = $(13.5)(696\,ft) = 9{,}396\,ft^2$							
Mark	w_{DL} *(psf)*	*Area (sf)*	W_i *(kips)*	X_{cg} *(ft)*	Y_{cg} *(ft)*	$W(X_{cg})$	$W(Y_{cg})$
Floor	72.0	29,090	2,094	100	70	209,448	146,614
Walls	15.0	9,396	141	100	70	14,094	9,866
Totals			2,235			223,542	156,479
	$X_{cg} = 223{,}542/2{,}235 = 100.0\,ft$; $Y_{cg} = 156{,}479/2{,}235 = 70.0\,ft$						

Table 3A-2. Mass properties summary (1)

Level	*W (kips)*	X_{cg} *(ft)*	Y_{cg} *(ft)*	*M* (2)	MMI (3)
Roof	2,066	100	70	5.3	26,556
4th	2,235	100	70	5.8	28,728
3rd	2,235	100	70	5.8	28,728
2nd	2,235	100	70	5.8	28,728
Total	8,771			22.7	

Notes:

1. Mass (M) and mass moment of inertia (MMI) are used in analysis for determination of fundamental period (T).
2. $M = (W/386.4)$ (kips-sec^2/in.)
3. $MMI = M/A\ (l_x + l_y)$ (kips-sec^2-in.)

2b. **Determine design base shear.**

As noted above, Equation (30-4) governs, and:

$$V = 0.082W = 0.082(8{,}771) = \underline{\underline{720\,\text{kips}}}$$

2c. **Determine vertical distribution of force.** **§1630.5**

For the static lateral force procedure, vertical distribution of force to each level is applied as follows:

$$V = F_t + \sum F_i \quad \text{where} \quad F_t = 0.07T(V) \le 0.25(V) \tag{30-13}$$

$$\text{Except} \quad F_t = 0 \quad \text{where} \quad T \le 0.7\,\text{sec} \tag{30-14}$$

For this structure: $T = 0.92\,\text{sec} \therefore F_t = 0.07(0.92)(720) = 46.4\,\text{kips}$

The concentrated force F_t is applied at the roof, in addition to that portion of the balance of the base shear distributed to each level per §1630.5:

$$F_x = \frac{(V - F_t)W_x h_x}{\sum W_i h_i} = (673.6)\left(\frac{W_x h_x}{\sum W_i h_i}\right) \tag{30-15}$$

Table 3A-3. Vertical distribution of shear

Level	w_x *(kips)*	h_x *(ft)*	$w_x h_x$ *(k-ft)*	$\frac{w_x h_x}{\Sigma wx}$	F_x *(kips)*	ΣV *(kips)*
Roof	2,066	55.5	114,663	0.375	299.0	
4th	2,235	42.0	93,870	0.307	206.8	299.0
3rd	2,235	28.5	63,698	0.208	140.3	505.8
2nd	2,235	15.0	33,525	0.110	73.9	646.1
Total	8,771		305,756	1.000	720.0	720.0

Note: F_{roof} = 0.38 (673.6) + 46.4 = 299.0 kips

2d. Determine horizontal distribution of shear. §1630.6

Structures with concrete fill floor decks are typically assumed to have rigid diaphragms. Seismic forces are distributed to the moment frames according to their relative rigidities. For structures with assumed rigid diaphragms, an accidental torsion must be applied (in addition to any actual torsional moment) equal to that caused by displacing the center of mass 5 percent of the building dimension perpendicular to the direction of the applied lateral force.

For the structural computer model of this Design Example, this can be achieved by combining the direct seismic force applied at the center of mass at each level with a torsional moment at each level:

North-south:

$$M_t = 0.05(204\,\text{ft})F_X = (10.2)F_X$$

East-west:

$$M_t = 0.05(144\,\text{ft})F_X = (7.2)F_X$$

Table 3A-4. Horizontal distribution of shear

Level	F_X *(kips)*	*N/S* M_t *(k-ft)*	*E/W* M_t *(k-ft)*
Roof	299.0	3,050	2,153
4th	206.8	2,109	1,489
3rd	140.3	1,431	1,010
2nd	73.9	754	532

Note: M_t = horizontal torsional moment

Using the direct seismic forces and torsional moments noted above, the force distribution to the frames is generated by computer analysis. The torsional seismic component is always additive to the direct seismic force. For the computer model, member sizes are initially proportioned by extrapolation from the tested configurations for SMRF reduced beam section joints, as discussed in Part 6 below.

From the preliminary computer analysis, the shear force at the ground level is determined for each frame column. As shown in Figure 3A-5, there are a total of six rigid frames: A1, A2, B1, B2, B3, and B4. Frames A1 and A2 are identical. Frames B1, B2, B3, and B4 are also identical. Recognizing that the building is symmetrical, the frame forces are the same for Frames A1 and A2, as well as for Frames B1 through B4. Frame forces at the base of each frame type, A1 and B1 are summarized in Tables 3A-5 and 3A-6.

Table 3A-5. North-south direction, frame type A1

Column Shears (kips)	Line A/1.2 (kips)	Line A/2 (kips)	Line A/3 (kips)	Line A/4 (kips)	Line A/5 (kips)	Line A/5.8 (kips)	Total (kips)
Direct Seismic	41.8	75.2	69.7	69.7	75.2	41.8	373.4
Torsion Force	2.6	4.6	4.3	4.3	4.6	2.6	23.0
Direct + Torsion	44.4	79.8	74.0	74.0	79.8	44.4	396.4

Table 3A-6. East-west direction, frame type B1

Column Shears (kips)	Line 1/A.2 (kips)	Line 1/B (kips)	Line 1/C (kips)	Line 1/C.8 (kips)	Total (kips)
Direct Seismic	33.4	59.9	59.9	33.4	186.6
Torsion Force	1.3	2.3	2.3	1.3	7.2
Direct + Torsion	34.7	62.2	62.2	34.7	193.8

As a check on the computer output, compare the total column shears with the direct seismic base shear of 720 kips:

North-south:

$$\Sigma F_{type\,A} = 2(373.4) = 746.8 > 720\,\text{kips} \qquad o.k.$$

East-west:

$$\Sigma F_{type\,B} = 4(186.6) = 746.4 > 720\,\text{kips} \qquad o.k.$$

The summation of the column shears is about 3 percent greater than the design base shear input to the computer model. This is mostly due to the inclusion of $P\Delta$ effects in the computer analysis. As required by §1630.1.3, $P\Delta$ effects are to be considered when the ratio of secondary (i.e., moment due to $P\Delta$ effects) to primary moments exceeds 10 percent.

Next, to refine the initial approximation for r_{max} and ρ, the actual column shears for Frame A1 from Table 3A-5 above will be used.

$$r_{max} = 0.7(79.8 + 74.0)/747 = 0.144$$

$$\therefore\ \rho = 2 - \frac{20}{0.144(33{,}311)^{1/2}} = 1.24 \approx 1.25 \qquad o.k.$$

3. **Interstory drift.**

3a. **Determine Δ_S and Δ_M.**

The design level response displacement Δ_S is the story displacement at the center of mass. It is obtained from a static-elastic analysis using the design seismic forces derived above. For purposes of displacement determination, however, §1630.10.3 eliminates the upper limit on T_B, used to determine base shear under Equation (30-4). The maximum inelastic response displacement Δ_M includes both elastic and estimated inelastic drifts resulting from the design basis ground motion. It is computed as follows:

$$\Delta_M = 0.7(R)\Delta_S = 0.7(8.5)\Delta_S = 5.95\Delta_S \tag{30-17}$$

The maximum values for Δ_S and Δ_M are determined, including torsional effects (and including $P\Delta$ effects for Δ_M). Without the $1.3T_A$ limit on T_B, the design base shear per Equation (30-4) is:

North-south:

$$T_{By} = 1.30\,\text{sec}$$

$$V_{n/s} = \frac{C_v I}{RT}W = \frac{0.64(1.0)}{8.5(1.30)}W = 0.058W = \underline{\underline{509\,\text{kips}}} \tag{30-4}$$

East-west:

$$T_{Bx} = 1.16\,\text{sec}$$

$$V_{e/w} = \frac{C_v I}{RT}W = \frac{0.64(1.0)}{8.5(1.16)}W = 0.064W = \underline{\underline{561\,\text{kips}}}$$

Note that §1630.9.1 and §1630.1.1 require use of the *unfactored* base shear *V*, with $\rho = 1$. Using these modified design base shears, the accidental torsion and force distribution to each level are adjusted for input to the computer model. The structure displacements and drift ratios are derived as shown below in Table 3A-7.

Table 3A-7. Interstory displacements

North-South Interstory Displacements				
Story	Height h (in.)	Δ_S Drift (in.)	Δ_M Drift (in.)	Drift Ratio (Δ_M/h)
4th	162	(1.36 - 1.16)= 0.20	1.19	0.0073
3rd	162	(1.16 - 0.85)= 0.31	1.84	0.0114
2nd	162	(0.85 - 0.47)= 0.38	2.26	0.0140
1st	180	(0.47 - 0.0) = 0.47	2.80	0.0156
East-West Interstory Displacements				
Story	Height h (in.)	Δ_S Drift (in.)	Δ_M Drift (in.)	Drift Ratio (Δ_M/h)
4th	162	(1.17 - 1.01)= 0.16	0.95	0.0059
3rd	162	(1.01 - 0.73)= 0.27	1.61	0.0099
2nd	162	(0.73 - 0.40)= 0.33	1.96	0.0121
1st	180	(0.40 - 0.0) = 0.40	2.38	0.0132

Note: Interstory drift ratio = Δ_M/story height.

3b. Determine the story drift limitation. §1630.10

For structures with $T > 0.7$, the allowable story drift is: $\Delta_M = 0.020$ (story height). A review of drift ratios tabulated in Table 3A-7 shows that all interstory drift ratios are less than 0.020, using seismic forces corresponding to the actual period T_B in base shear Equation (30-4). Also, note that all drift ratios are less than $(0.95)(0.020) = 0.019$. This 5 percent reduction in the drift limit is required for reduced beam section joint designs under FEMA-267A.

Looking ahead to the SMRF member design, §2213.7.10 imposes certain conditions on moment frame drift calculations, including bending and shear contributions from clear beam-column spans, column axial deformation, and panel zone distortion. These conditions are met by most general purpose structural analysis programs used in building design, except for the contribution to frame drift from panel zone distortion. The code provides an exception whereby a centerline analysis may be used if the column panel zone strength can develop 80 percent $(0.8\Sigma M_s)$ of the strength of the girders framing into the joint. As will be seen from the SMRF beam-column joint design, this condition will always be met under the current performance criteria. Moreover, the FEMA-267A provisions produce stronger, stiffer column panel zone designs than previously permitted by the UBC. Therefore, panel zone distortion will generally not contribute significantly to overall frame drift.

To gain a feel for the influence of beam-column joint stiffness on overall frame drift, two conditions are modeled for east-west seismic forces, with the lateral displacements at the roof derived as follows:

Centerline analysis: 1.37 inches

50 percent rigid joint analysis: 1.17 inches

The centerline analysis produces a displacement 17 percent greater than the 50 percent rigid joint analysis. Most engineers feel that the centerline analysis over-estimates, and the 100 percent rigid joint underestimates, the actual frame drift. The 50 percent rigid joint analysis is an accepted standard of practice for providing reasonable design solutions for frame displacements.

4. Typical diaphragm design. §1633.2.9

4a. Determine diaphragm load distribution.

In multi-story buildings, diaphragm forces F_{px} are determined by the formula:

$$F_{px} = \frac{F_t + \sum F_i}{\sum w_i}\left(w_{px}\right) \quad \text{and} \quad 0.5C_a IW_{px} < F_{px} \leq 1.0C_a IW_{px} \qquad (33\text{-}1)$$

The diaphragm forces at each level, with the upper and lower limits, are calculated as shown in Table 3A-8 below. Note that the $0.5C_a IW_{px}$ minimum controls for this building.

Table 3A-8. Diaphragm load distribution

Level	F_i (1) *(kips)*	ΣF_i *(kips)*	w_x *(kips)* (1)	Σw_i *(kips)*	F_{Px} *(kips)* (2)	$0.5C_a Iw_{Px}$ *(kips)* (3)	$1.0C_a Iw_{Px}$ *(kips)* (3)
Roof	299.0	299.0	2,066	2,066	299.0	454.5	909.0
4th	206.8	505.8	2,235	4,301	262.8	491.7	983.4
3rd	140.3	646.1	2,235	6,536	220.9	491.7	983.4
2nd	73.9	720.0	2,235	8,771	183.5	491.7	983.4

Notes:
1. See Table 3A-3.
2. F_t = 46.4 kips (see Part 2c)
3. C_a = 0.44 kips (see Part 1d)

4b. **Determine diaphragm shear.**

The diaphragm design is governed by the minimum seismic force $\left(0.5C_a I_p W_p\right)$ and the 491.7 kip force at the floor levels is used for design. This value is not factored up by ρ per §1630.1.1. The reliability/redundancy factor ρ is only applied to transfer diaphragms (see Blue Book §105.1.1).

$$\therefore E_{floor} = F_P = \underline{\underline{491.7\,\text{kips}}} \tag{30-1}$$

The maximum diaphragm span occurs between Lines A and H, so the north-south direction will control.

Although the computer model assumes rigid diaphragms for load distribution to the frames, we now consider the diaphragm as a horizontal beam. Shears at each line of resistance are derived assuming the diaphragm spans as simple beams under a uniform load.

$$w_1 = E_{floor} / (200') = 491.7 / (200) = 2.46 \text{ k/ft}$$

Diaphragm shear:

$$V_A = V_H = 2.46\left(\frac{200}{2}\right) = 246\,\text{kips}$$

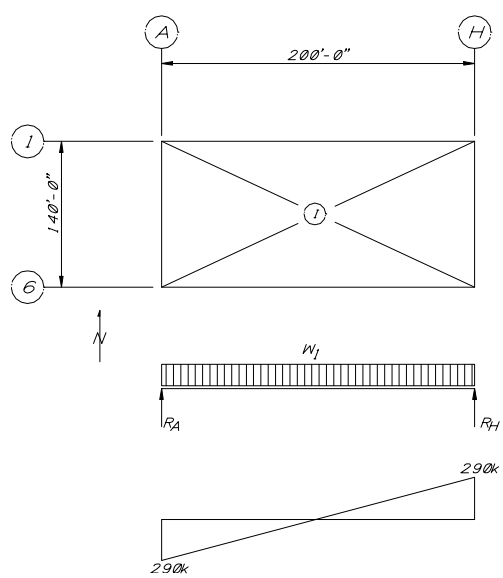

Figure 3A-6. Diaphragm shear

Using the alternate basic load combination of Equation (12-13) for allowable stress design, the factored diaphragm design shear at Line A is (E/1.4):

$$q_A = \frac{(V)}{1.4} = \frac{246}{1.4(140')} = 1.25 \text{ k-ft}$$

Using 3¼-inch light weight concrete over $3'' \times 20$ gauge deck, with 4 welds per sheet at end laps and button punch at 12 in. side laps, the allowable deck shear per the manufacturer's ICBO Evaluation Report is:

$$V_{allow} = 1.75 > 1.25 \text{ k-ft} \quad o.k.$$

4c. **Determine collector and chord forces.**

Assuming the diaphragm acts as a simple beam between Lines A and H (and this is the usual assumption), the maximum chord force at Lines 1.2 and 5.8 for north-south seismic is:

$$CF = \frac{2.46(200)^2}{8(123)} = 100.0 \text{ k}$$

Because the beam framing is continuous on Lines 1.2 and 5.8, these lines are chosen to resist the chord force. [Lines 1 and 6 have indentations in the floor plan (Figure 3A-2).] The chord force must be compared to the collector force at these lines, and the greatest value used for design.

For east-west seismic loads, the factored shear flow at Line 1.2 is approximately:

$$q_{1.2} = \frac{491.7}{(2)(200')} = 1.23 \text{ k-ft}$$

Figure 3A-7 shows the collector force diaphragm for Line 1.2.

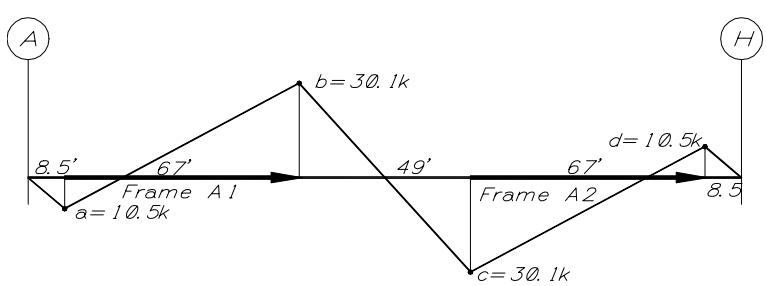

Figure 3A-7. Collector force diagram at Line 1.2

The maximum collector force is:

$$F_a = F_d = 1.23(8.5) = 10.5\,\text{kips}$$

$$F_b = F_c = 1.23(75.5) - 123 = 30.1\,\text{kips}$$

Per §1633.2.6, seismic collectors must be designed for the special seismic load combinations of §1612.4. Note that the value for E_M does not include the ρ factor.

$$E_M = \Omega_o(F_P) = 2.8(30.1) = 84.3\,\text{kips} \qquad (30\text{-}2)$$

The seismic drag tie or chord can be implemented using supplemental slab reinforcing. With the strength design method for concrete per §1612, including Exception 2, the factored collector and chord forces are:

Factored chord force: $T_u = 1.1(E) = 1.1(100.0) = 110.0\,\text{kips}$ §1612.4

Factored collector force: $T_u = 1.0(E_M) = 1.0(84.3) = 92.7\,\text{kips}$ (12-17)

The factored chord forces for north-south seismic loads govern the design at Line 1.2. The required slab chord reinforcing is calculated as:

Required $A_s = T_u / \phi f_y = 110.0/0.9(60) = 2.0\,\text{in.}^2$

$\therefore$ Use 4-#7, $A_s = 2.4\,\text{in.}^2$

5. SMRF member design.

In this Part, representative beam and column members of Frame A1 are designed under the provisions of §2213.7. Certain provisions of §2213.7 pertaining to joint design have been modified by the recommendations of FEMA-267A. These provisions, including the strong column-weak beam and panel zone requirements, are discussed with the RBS joint design in Part 6 of this Design Example.

From past experience, steel moment frame designs have typically been drift controlled. Frame members were chosen with sufficient stiffness to meet the drift limits, and then checked for the SMRF design requirements. However, to meet the intent of §2213.7.1, the design process begins by selecting beam-column combinations extrapolated from *tested* RBS joint assemblies. The rationale for selection of the member sizes is also presented in Part 6, with a $W30\times108$ beam and $W14\times283$ column chosen for this Design Example.

5a. **Design typical beam at 3rd floor.**

The typical beam selected to illustrate beam design is a third-floor beam in Frame A1. This is shown in Figure 3A-8 below.

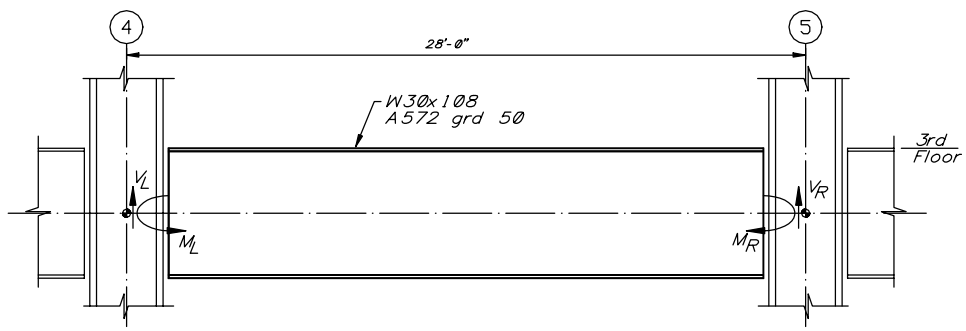

Figure 3A-8. Typical beam at third floor of Frame A1.

From a review of the computer output prepared separately for this Design Example, the moments and shears at the right end of the beam are greatest. The moments and shears at the face of the column at Line 5 are:

$M_{DL} = 1{,}042$ kip-in.

$M_{LL} = 924$ kip-in.

$M_{seis} = \pm 3{,}590$ kip-in.

$M_E = \rho M_{seis} = 1.25(3{,}590) = \pm 4{,}487$ kip-in.

$V_{DL} = 16.4$ kips

$V_{LL} = 13.3$ kips

$V_{seis} = \pm 22.3$ kips

$V_E = \rho V_{seis} = 1.25(22.3) = \pm 27.9$ kips §1630.1.1

The basic load combinations of §1612.3.1 (ASD) are used, with no one-third increase. (These were selected to illustrate their usage, although generally it is more advantageous to use the alternate basic load combinations of §1612.3.2.)

$$D+L: \quad M_{D+L} = 1{,}042 + 924 = 1{,}966 \text{ kip-in.} \tag{12-8}$$

$$V_{D+L} = 16.4 + 13.3 = 29.7 \text{ kips}$$

$$D + \frac{E}{1.4}: \quad M_{D+E} = 1{,}042 + \frac{4{,}487}{1.4} = 4{,}247 \text{ kip-in.} \tag{12-9}$$

$$V_{D+E} = 16.4 + \frac{27.9}{1.4} = 36.3 \text{ kips}$$

$$D + 0.75\left[L + \left(\frac{E}{1.4}\right)\right]: \quad M_{D+L+E} = 1{,}042 + 0.75\left[924 + \left(\frac{4{,}487}{1.4}\right)\right] = 4{,}139 \text{ kip-in.} \tag{12-11}$$

$$V_{D+L+E} = 16.4 + 0.75\left[13.3 + \left(\frac{27.9}{1.4}\right)\right] = 41.3 \text{ kips}$$

Try $W30\times108$, ASTM A572, Grade 50 beam.

Check flange and web width-thickness ratios per §2213.7.3 (flange and web compactness criteria to mitigate premature formation of local buckling):

$$\frac{b_f}{2t_f} \le \frac{52}{\sqrt{50}} = 7.35 \quad \text{and} \quad \frac{d}{t_w} \le \frac{640}{\sqrt{50}} = 90.5$$

For $W30\times108$: $\dfrac{b_f}{2t_f} = 6.9 < 7.35 \quad o.k.$

and $\dfrac{d}{t_w} = \dfrac{29.83}{0.545} = 54.7 < 90.5 \quad o.k.$

Check the beam bracing requirements of §2213.7.8:

Maximum brace spacing $= 96r_y = 96(2.15)/12 = 17.2$ ft

Place minimum bracing at one-third points: $L = 96\,28.0/3 = 9.33$ ft on center

Check allowable moment capacity:

From AISC-ASD (p. 2-10) for $W30\times108$:

$L_u = 9.8 > 9.33 \therefore F_b = 0.60(F_y) = 30.0\,\text{ksi}$

Allowable $M_a = 299(30.0) = 8{,}970$ kip-in. $> 4{,}247$ kip-in. *o.k.*

Check allowable shear capacity:

For $W30\times108$: $\dfrac{h}{t_w} = \dfrac{29.83 - 2(0.76)}{0.545} = 51.9 < \dfrac{380}{\sqrt{50}} = 53.7$

$\therefore F_v = 0.4(F_y) = 0.4(50) = 20.0\,\text{ksi}$

Allowable $V_a = 20.0(0.545)(29.83) = 325\,\text{kips} > 41.3\,\text{kips}$ *o.k.*

$\therefore$ Use $W30\times108$ beam

Note: The $W30\times108$ beam is much larger than required by allowable stress considerations. The reason for this is that this shape has been part of the beam-column assemblies tested with RBS configurations.

5b. Design typical column at 2nd story.

The column to be designed is the second-story column of Frame A1 shown in Figure 3A-9.

For the second-story column at Line 5, the maximum column forces generated by the frame analysis (not shown) are:

$M_{DL} = 236$ kip-in.

$M_{LL} = 201$ kip-in.

$M_{seis} = 3{,}970$ kip-in.

$M_E = 1.25(3{,}970) = 4{,}963$ kip-in.

$V_{DL} = 3.1\,\text{kips}$

$V_{LL} = 2.7\,\text{kips}$

$V_{seis} = 56.8\,\text{kips}$

$$V_E = 1.25(56.8) = 71\,\text{kips}$$

$$P_{DL} = 113\,\text{kips}$$

$$P_{LL} = 75\,\text{kips}$$

$$P_{seis} = 28\,\text{kips}$$

$$P_E = 1.25(28) = 35\,\text{kips}$$

The maximum strong axis moments occur at the bottom of the column, and are taken at the top flange of the second-floor beam.

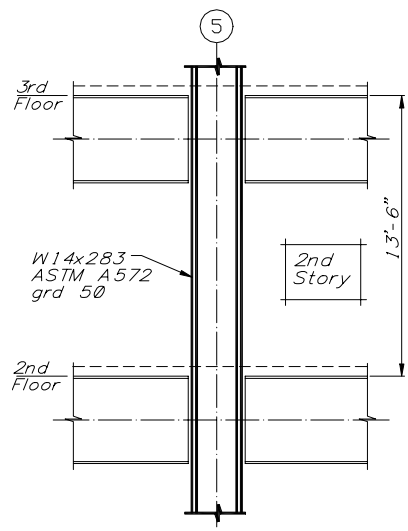

Figure 3A-9. Typical second story column at Frame A1

Using the basic load combinations of §1612.3.1:

$$D + L: \; M_{D+L} = 236 + 201 = 437 \text{ kip-in.} \tag{12-8}$$

$$P_{D+L} = 113 + 75 = 188\,\text{kips}$$

$$V_{D+L} = 3.1 + 2.7 = 5.8\,\text{kips}$$

$$D+\frac{E}{1.4}: \quad M_{D+E}=236+\frac{4{,}963}{1.4}=3{,}781 \text{ kip-in.} \tag{12-9}$$

$$P_{D+E}=113+\frac{35}{1.4}=138\,\text{kips}$$

$$V_{D+E}=3.1+\frac{71.0}{1.4}=53.8\,\text{kips}$$

$$0.9D-\frac{E}{1.4}: \quad P_{D-E}=0.9(113)-\frac{35}{1.4}=76.7\,\text{kips compression} \tag{12-10}$$

$$D+0.75\left[L+\left(\frac{E}{1.4}\right)\right]: \quad M_{D+L+E}=236+0.75\left[201+\left(\frac{4{,}963}{1.4}\right)\right]=3{,}046 \text{ kip-in.} \tag{12-11}$$

$$V_{D+L+E}=3.1+0.75\left[2.7+\frac{71.0}{1.4}\right]=43\,\text{kips}$$

$$P_{D+L+E}=113+0.75\left[75+\left(\frac{35}{1.4}\right)\right]=188\,\text{kips}$$

Under the requirements of §2213.5.1, columns must have the strength to resist the following axial load combinations (neglecting flexure):

$$P_{DL}+0.7P_{LL}+\Omega P_{seis}: P_{comp}=113+0.7(75)+2.8(28)=244\,\text{kips compression}$$

$$0.85P_{DL}-\Omega P_{seis}: \qquad P_{tens}=0.85(113)-2.8(28)=-18\,\text{kips compression}$$

The intent of these supplemental load combinations is to ensure that the columns have adequate axial strength to preclude buckling when subjected to the maximum seismic force that can be developed in the structure.

Try $W14\times283$, ASTM A572, Grade 50 column.

Unbraced column height (taken from top of framing at bottom to mid-depth of beam at top):

$$h=13.5-(2.5/2)=12.25\,\text{ft}$$

Under §2213.5.3, the factor k can be taken as unity if the column is continuous, drift ratios are met per §1630.8, and $f_a \le 0.4(F_y)$. The example column is continuous, complies with the drift ratios, and:

$$\text{Maximum} \quad f_a = 188/83.3 = 2.26\,\text{ksi} < 0.4(50) = 20.0\,\text{ksi} \;\therefore\; k = 1.0$$

$$\left(\frac{kl}{r}\right)_x = \frac{12(12.25)}{6.79} = 21.6$$

$$\left(\frac{kl}{r}\right)_y = \frac{12(12.25)}{4.17} = 35.3$$

$$\therefore\; F_a = 26.5\,\text{ksi}$$

$$\text{Maximum} \quad \frac{f_a}{F_a} = \frac{2.26}{26.5} = 0.085 < 0.15$$

Therefore, AISC-ASD Equation H1-3 is used for combined stresses.

From AISC-ASD manual (p. 3-21) for $W14 \times 283$, Grade 50:

$$L_c = 14.4 > 12.5$$

$$\therefore\; F_b = 0.66(F_y) = 33.0\,\text{ksi}$$

Check combined stresses for the critical load combinations.

$$D + \frac{E}{1.4}: \quad \frac{f_a}{F_a} + \frac{f_{bx}}{F_b} = \frac{138}{83.3(26.5)} + \frac{3{,}781}{459(33.0)} = 0.063 + 0.250 = 0.313 < 1.0 \;\; o.k. \qquad (12\text{-}9)$$

$$D + 0.75\left[L + \frac{E}{1.4}\right]: \quad \frac{f_a}{F_a} + \frac{f_{bx}}{F_b} = 0.085 + \frac{3{,}046}{459(33.0)} = 0.286 < 1.0 \qquad o.k. \qquad (12\text{-}11)$$

Check column shear capacity:

$$\text{Allowable} \quad V_a = 0.4(50)(16.74)(1.29) = 432\,\text{kips} > 53.8\,\text{kips} \qquad o.k.$$

Next, check required axial strength per §2213.5.

Compression:

$$P_{sc} = 1.7P_{allow} = 1.7\,(83.3)(26.5) = 3{,}753\,\text{kips} > 244\,\text{kips} \qquad o.k.$$

Tension:

$$P_{st} = F_y A = 50(83.3) = 4{,}165\,\text{kips} \qquad o.k.$$

The column width-thickness ratio limit of §2213.7.3 is to meet the requirement of AISC-ASD, Chapter N, Plastic Design, Section N7. Columns meeting this criterion are expected to achieve full plastic capacity prior to local flange buckling.

$$\frac{b_f}{2t_f} \le 7.0 \quad \text{for} \quad F_y = 50\,\text{ksi}$$

$$\text{For } W14\times 283\text{:} \quad \frac{b_f}{2t_f} = 3.89 < 7.0 \qquad o.k.$$

$\therefore$ Use $W14\times 283$ column

Note: The $W14\times 283$ column is much larger than required by allowable stress considerations. The beam-column assemblies selected for this Design Example have been tested with the RBS configuration.

6. SMRF beam-column connection design.

As discussed in FEMA-267 (Sections 7.3 and 7.5), SMRF joint designs may be acceptable *without* testing of a particular beam-column combination only with the following qualifications:

1. Joint design calculations are based on comparisons with tested assemblies.
2. The joint configuration considered closely mirror the tested detail.
3. Calculated member sizes are extrapolated from tested combinations.
4. A qualified third party peer review is performed.

Where such calculations are determined to be acceptable, the design provisions of FEMA-267A may be applied to member sizes extrapolated or interpolated from tested configurations. Use of calculations alone, without testing to form a basis for reasonable extrapolation, is *not* recommended.

This Design Example utilizes tests conducted at the University of Texas Ferguson Laboratory [Engelhardt et al., 1996]. Testing of additional RBS joint combinations was performed as part of the SAC Phase II program. Results of these tests will be published by SAC when available; updates may be found at SAC's web site: http://quiver.eerc.berkeley.edu:8080/design/conndbase/index.html.

Using the circular cut reduced beam section, the following beam-column joint assemblies were successfully tested at the University of Texas:

Table 3A-9. Tested RBS beam-column joint assemblies

Specimen	Column	Beam
DB2	W14x426	W36x150
DB3	W14x426	W36x170
DB4	W14x426	W36x194
DB5	W14x257	W30x148

Each of these specimens achieved plastic chord rotation capacity exceeding 0.03 radians, the recommended acceptance criterion per FEMA-267A (Section 7.2.4).

The parameters for extrapolation or interpolation of beam-column test results are difficult to determine. When extrapolating, it should be done only with a basic understanding of the behavior of the tested assembly. The California Division of the State Architect (DSA), in the commentary to its Interpretation of Regulations 27-8 (DSA IR 27-8), has established guidelines for extrapolation of joint tests. Until further testing is completed, DSA recommends that members sizes taken from tested configurations be extrapolated, by weight or flange thickness, no more than 15 percent upward or no more than 35 percent downward.

Using the DSA criteria for extrapolation with the lightest column section (DB5) of the tested sizes noted above, the following possible beam-column size combinations are possible:

$W14\times257$ column:

Max. weight $= 296$ lbs. Max. $t_f = 2.17$ in.

Min. weight $= 167$ lbs. Min. $t_f = 1.22$ in.

$\therefore$ Use $W14\times176$ to $W14\times283$

$W30\times148$ beam:

Max. weight $=170$ lbs. Max. $t_f = 1.36$ in.

Min. weight $=96$ lbs. Min. $t_f = 0.77$ in.

$\therefore$ Use $W30\times108$ to $W30\times173$

For compatibility with this test configuration, beam-column pairs are selected from the ranges noted above. After evaluating several combinations for weak beam/strong column and panel zone strength criteria, the combination of a $W30\times108$ beam and $W14\times283$ column is selected for use in this Design Example. Note that this combines the lightest beam with the heaviest column in the available range.

The $W30\times108$ beam was selected after confirming that with this combination, the overall frame drifts per the computer analysis are within the code limits (as shown in Part 3b above). The $W14\times283$ column was chosen to eliminate the requirement for doubler plates. When given the option, steel fabricators have elected to use heavier columns in lieu of doubler plates for economy. Also, tests have shown that the weld of the doubler plate to the column fillet (*k*) region may be detrimental to joint performance.

As shown in Figure 3A-10, the $W14\times283$ columns are to be full-height, one length. Full-height columns without splices were found to be the least-cost option. Column splices in SMRFs must comply with §2213.5.2. However, it is suggested that column splices be made with complete penetration welds located near mid-height.

Note: Where referenced, the FEMA-267/267A sections are noted with a preceding "FEMA" in the remainder of this Design Example (e.g. FEMA §7.2.2.1). The reduced beam section (RBS) joint configuration used in this Design Example is shown in Figure 3A-10.

6a. Determine member and material strengths.

When determining the strength of a frame element, FEMA §7.2.2 defaults back to §2213.4.2. Material strength properties are stipulated in FEMA §7.5.1, Table 7.5.1-1. FEMA-267A modified the allowable through-thickness stress to 0.9 (F_y) in recognition of improved joint performance for configurations locating the plastic hinge away from the face of the column. For this Design Example, material strengths are taken as:

$W30\times108$ beam, Shape Group 2, A572 Grade 50:

$F_y = 50\,\text{ksi}$

$F_{ym} = 58\,\text{ksi}$

$F_u = 65\,\text{ksi}$

Through-thickness $F_{TT} = 0.9(50) = 45\,\text{ksi}$

$W14\times283$ column, Shape Group 4, A572 Grade 50:

$F_y = 50\,\text{ksi}$

$F_{ym} = 57\,\text{ksi}$

$F_u = 65\,\text{ksi}$

Through-thickness $F_{TT} = 45\,\text{ksi}$

6b. Establish plastic hinge configuration and location.

The fundamental design intent espoused in FEMA-267 is to move the plastic hinge away from the column face. The RBS design achieves that goal in providing a well-defined, relatively predictable plastic hinge region. Of the various RBS options, the circular curved configuration is chosen due to its combination of tested performance and economy of fabrication.

The distance c from the face of the column (see Figure 3A-10) to the beginning of the circular cut, and the length of the cut l_c, are based on prior RBS tests. It is desirable to minimize c to reduce the amplification of M_f at the face of the column.

FEMA-267A recommends that $c = d_b / 4$, while Englehardt [1998] recommends $0.5b_f \le c \le 0.75b_f$. As the member sizes for this Design Example are extrapolated from testing by Englehardt, $c \cong 0.6b_f$ is selected. Both FEMA-267A and Englehardt recommend $l_c \cong 0.75d$.

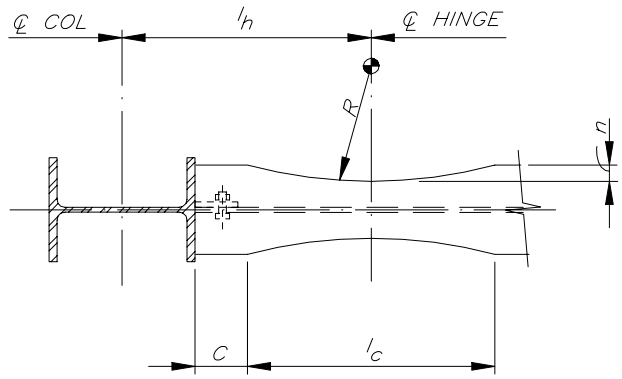

Figure 3A-10. RBS ("dog bone") geometry

$W30\times108$:

$$0.5b_f = 0.5(10.5) = 5.25 \text{ in.}$$

$$0.75b_f = 0.75(10.5) = 7.88 \text{ in.}$$

$$\therefore \text{ Use } c = 6.0 \text{ in.}$$

$$l_c = 0.75d = 0.75(29.83) = 22.37 \text{ in.}$$

$$\therefore \text{ Use } l_c = 24.0 \text{ in.}$$

The depth of the cut n should be made such that 40 percent to 50 percent of the flange is removed. This will limit the projection of moments at the face of the column to within 90 percent to 100 percent of the plastic capacity of the full beam section. With a 45 percent reduction in the flange area:

$$n = 0.45\left(\frac{b_f}{2}\right) = \frac{0.45(10.5)}{2} = 2.36 \text{ in.}$$

Use 2 ¼-in. cut

$$\therefore R = \frac{4n^2 + l_c^2}{8n} = \frac{4(2.25)^2 + 24^2}{8(2.25)} = 33.1 \text{ in. radius}$$

The plastic hinge may be assumed to occur at the center of the curved cut per FEMA §7.5.3.1, so that:

$$l_h = (16.74/2) + 6.0 + (24/2) = 26.37 \text{ in.}$$

and:

$$L = 28.0\,\text{ft.}$$

$$\therefore\ L' = 28 - 2(26.37/12) = 23.6\,\text{ft}$$

The length between the plastic hinges L' (see Figure 3A-11) is used to determine forces at the critical sections for joint analysis.

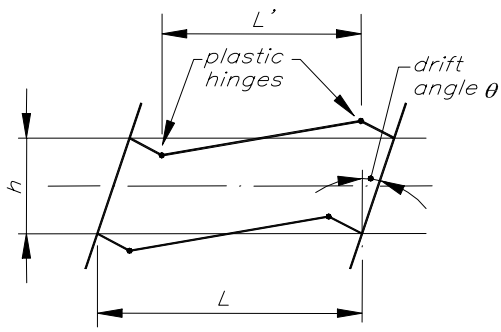

Figure 3A-11. Plastic hinges

The circular curved cut provides for a gradual transition in beam flange area. This configuration also satisfies the intent of §2213.7.9.

6c. **Determine probable plastic moment and shear at the reduced beam section.**

The plastic section modulus at the center of the reduced beam section is calculated per FEMA §7.5.3.2 as:

$$Z_{RBS} = Z_x - [b_r t_f (d - t_f)] \qquad \text{FEMA-267A, Eqn. (7.5.3.2-1)}$$

where b_r is the total width of material cut from the beam flange.

$$b_r = 2(2.25) = 4.5 \text{ in. and}$$

$$Z_{RBS} = 346 - [4.5(0.76)(29.83 - 0.76)] = 247\,\text{in.}^3$$

Next, the probable plastic moment at the reduced beam section M_{pr} is calculated as:

$$M_{pr} = Z_{RBS}\beta(F_Y) \qquad \text{FEMA-267A, Eqn. (7.5.3.2-2)}$$

The factor β accounts for both variations in the beam steel average yield stress and strain hardening at the plastic hinge. Per FEMA §7.5.2.2, for ASTM A572 steel, $\beta = 1.2$. Therefore:

$$M_{pr} = 247(1.2)(50) = 14{,}820 \text{ kip-in.}$$

As illustrated in FEMA §7.5.2.3, the shear at the plastic hinge is derived by statics, considering both the plastic moment at the hinge and gravity loads. For simplicity, the beam shear from the frame analysis for dead and live loads at the hinge is used. To be consistent with this strength design procedure, the special seismic load combinations of §1612.4 are used:

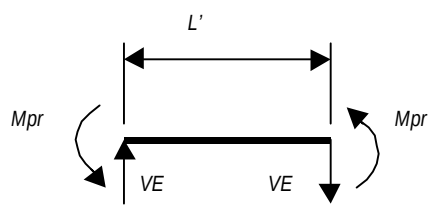

Figure 3A-12. Beam equilibrium under the probable plastic moment M_{pr}

$$V_E = \frac{2M_{pr}}{L'} = \frac{2(14{,}820)}{12(23.6)} = 104.7 \text{ kips}$$

and:

$$V_P = 1.2(V_D) + 0.5(V_L) + 1.0(V_E)$$

$$\therefore V_P = 1.2(16.4) + 0.5(13.3) + 1.0(104.7) = 131 \text{ kips}$$

6d. **Calculate strength demands at the critical sections of beam-column joint.**

There are two critical sections for the joint evaluation. The first section is at the interface of the beam section and the face of the column flange. The strength demand at this section is used to check the capacity of the beam flange weld to the column, the through-thickness stress on the column flange (at the area joined to the beam flange), and the column panel zone shear strength. The second critical section occurs at the column centerline. The moment demand at this location is

used to check the strong column-weak beam requirement per FEMA §7.5.2.5 (UBC §2213.7.5).

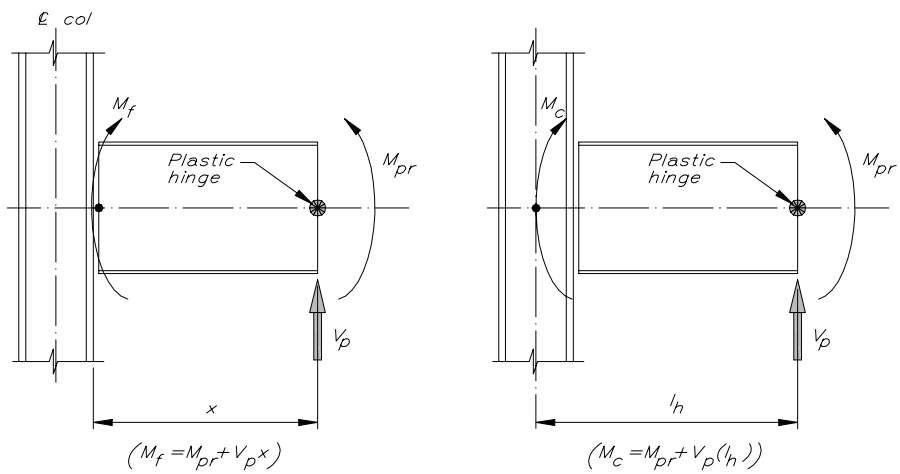

a. Column face

b. Column centerline

Figure 3A-13. Critical sections at beam-column joint

The moment at the face of the column is:

$$M_f = M_{pr} + V_P(x) = 14{,}820 + 131(6+12) = \underline{\underline{17{,}178}} \text{ kip-in.}$$ FEMA §7.5.2.4

The moment at the centerline of the column is:

$$M_{cl} = M_{pr} + V_P(l_h) = 14{,}820 + 131(26.37) = \underline{\underline{18{,}274}} \text{ kip-in.}$$

6e. **Evaluate the RBS joint strength capacity.**

Section 7.5.3.2 of FEMA-267A lists four criteria for the evaluation of RBS joint capacity:

1. At the reduced section, the beam must have the capacity to meet all code required forces (i.e. dead, live & seismic per §1612).

2. Code required drift limits must be met considering effects of the RBS.

3. The beam-to-column flange weld must have adequate strength.

4. The through-thickness stress on the face of the column at the beam flange must be within the allowable values listed in FEMA §7.5.1. (**Note:** In

subsequent studies conducted by the SAC project, typical rolled column shapes were found insensitive to through thickness stress. In FEMA-350, the requirement to check this parameter has been eliminated, and the connection is designed to produce near-yield conditions at the beam flange to column joint.)

Check reduced section for code design forces.

At the reduced section, the section modulus S_{RBS} is:

$$S_{RBS} = \frac{\left[4{,}470 - 2(4.5)(0.76)(14.92 - 0.78)^2\right]}{14.92} = 203\,\text{in.}^3$$

The allowable moment M_a, with $F_b = 33.0\,\text{ksi}$ (see Part 5a), is

$$M_a = 203(33.0) = 6{,}700\,\text{kip-in.} > 4{,}247\ \text{kip-in.}$$

Thus, the reduced $W30\times108$ section is adequate for the moments derived for the load combinations of §1612.3.1.

Check frame stiffness for code drift limits.

As discussed in FEMA §7.5.3, the RBS will reduce overall frame stiffness approximately 5 percent, thereby increasing calculated frame displacements about 5 percent proportionally. To account for this increase, the allowable drift limits are reduced 5 percent for comparison to calculated frame lateral deflections from the computer analysis. As shown in Part 3b, the structure drift ratios are found to be within the reduced code limits.

Check beam-to-column welded connection.

The $W30\times108$ beam and $W14\times283$ column are extrapolated from specimen sizes tested in an RBS configuration at the University of Texas. In the tested configuration, the beam *webs* have complete-penetration welds to the column flange. Under FEMA §7.8.2, the web connection should be consistent with the tested assemblies—this weld is shown in Figure 3A-17.

Note: In FEMA-350, RBS and other connections have been prequalified for application within ranges of member and frame sizes. As long as framing falls within prequalified limits, reference to specific test data is not required.

Using the cross-sectional area of the beam flange and web weldments at the face of the column (Figure 3A-14), the elastic section modulus S_c of the beam is calculated from the information in Table 3A-10.

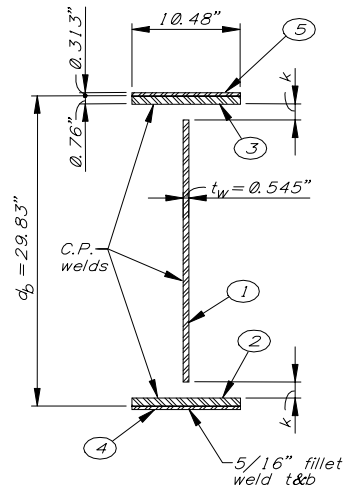

Figure 3A-14. Built-up section at column face

Table 3A-10. Built-up section properties

Mk	Area (in.^{2})	Y (in.)	A(y)^2	I_0 (in.^{4})
1	0.545(26.73)=14.58	0.00	0	869
2	0.76(10.48)=7.96	14.54	1,682	0
3	0.76(10.48)=7.96	14.54	1,682	0
4	0.31(10.48)=3.28	15.07	745	0
5	0.31(10.48)=3.28	15.07	745	0
Sum			4,854	869

The calculated section properties are:

$$I_c = 4{,}854 + 869 = 5{,}723\,\text{in.}^4$$

$$\therefore\ S_c = 5{,}723/15.23 = \underline{\underline{376\,\text{in.}^3}}$$

As given in FEMA §7.2.2.1, for complete penetration welds, the weld strength is taken at the beam yield stress of 50 ksi. The maximum weld stress is calculated using M_f (see Figure 3A-11). The moment demand on the weld at the face of the column:

$$f_{weld} = 17{,}178/376 = \underline{\underline{45.7\,\text{ksi}}} < 50\,\text{ksi} \qquad o.k.$$

With the beam web welded to the column, the plastic shear demand should be checked against the beam shear strength. The plastic shear demand is calculated in Part 6b above.

$$V_S = 0.55(50.0)(0.545)(29.83) = 447\,\text{kips} > V_p = \underline{\underline{131\,\text{kips}}} \quad o.k. \qquad \text{FEMA §7.8.2}$$

In this Design Example, the shear tab shown in Figure 3A-17 is present only for steel erection. For beam web connections using shear tabs, the shear tab and bolts are to be designed to resist the plastic beam shear V_p. The bolts must be slip-critical, and the shear tab may require a complete penetration weld to the column. However, in September 1994, ICBO issued an emergency code change to the 1994 UBC, which deleted the prior requirement for supplemental welds from the shear tab to the beam web. An example beam-column shear tab connection design is given in Design Example 1A, Part 6g.

Check the through-thickness stress at the column.

Under FEMA §7.5.3.2, the through-thickness stresses at the interface of the beam flange with the column face is determined as

$$f_{t-t} = M_f / S_c \qquad \text{FEMA §7.5.3.2}$$

where M_f and S_c are as determined above.

$$\therefore\ f_{t-t} = 17{,}178/376 = \underline{\underline{45.7\,\text{ksi}}} \approx 0.9(50) = 45.0\,\text{ksi} \quad o.k.$$

Although the through-thickness stress is at the upper limit of the recommended allowable stress, RBS joints have been successfully tested with calculated stresses as high as 58 ksi [Englehardt, et al., 1996]. The success of these tests is attributed to locating the plastic hinge away from the column face and into the beam span.

6f. Verify the strong column-weak beam condition.

The strong column/weak beam requirement given in FEMA §7.5.2.5 is similar to §2213.7.5. Per FEMA §7.5.2.5 the beam moments are derived from M_{pr} (see Part 6c above), whereas the UBC sums moments at the column centerline. The column moments ΣM_c are taken at the top and bottom of the column panel zone as shown in Figure 3A-15.

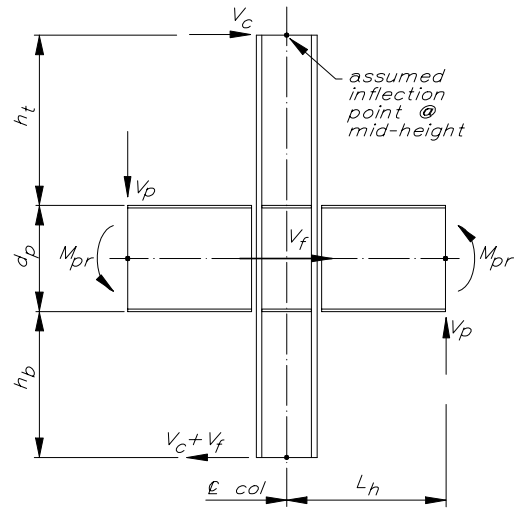

Figure 3A-15. Joint forces and moments

$$\frac{\Sigma Z_C\left(F_{yc} - f_a\right)}{\Sigma M_C} \geq 1.0 \qquad \text{FEMA Eqn. (7.5.2.5-1)}$$

where:

$$M_{Ct} = V_C h_t; \quad M_{Cb} = \left(V_C + V_f\right)h_b$$

and:

$$\Sigma M_C = M_{Ct} + M_{Cb}$$

V_f is the incremental seismic shear to the column at the 3rd floor. From the computer analysis (not shown): $V_f = 16.4\,\text{kips}$

Summing moments at the bottom of the lower column:

$$V_C = \frac{2\left[M_{pr} + l_h\left(V_p\right)\right] - V_f\left(h_b + d_P/2\right)}{\left(h_b + d_P + h_t\right)}$$

$$h_t = h_b = \frac{(13.5)(12)}{2} - \frac{29.83}{2} = 66.1 \text{ in.}$$

$$\therefore V_C = \frac{2[14{,}820 + 26.4(131)] - 16.4(66.1 + 29.83/2)}{[2(66.1) + 29.83]} = \underline{\underline{217.4\,\text{kips}}}$$

The column moments, taken at the top and bottom of the panel zone are:

$$M_{Ct} = 217.4(66.1) = 14{,}370 \text{ kip-in.}$$

$$M_{Cb} = (217.4 + 16.4)(66.1) = 15{,}454 \text{ kip-in.}$$

$$\therefore M_C = 14{,}370 + 15{,}454 = \underline{\underline{29{,}834}} \text{ kip-in.}$$

From Part 5b above, the maximum column axial stress is $f_a = 2.26\,\text{ksi}$. For the $W14 \times 283$ column, $Z_x = 542\,\text{in.}^3$:

$$\frac{\Sigma Z_C (F_{yc} - f_a)}{\Sigma M_C} = \frac{2[542(50 - 2.260)]}{29{,}824} = 1.74 > 1.0 \quad o.k. \qquad \text{FEMA Eqn. (7.5.2.5-1)}$$

Therefore, the columns are stronger than the beam moments $2M_{pr}$, and the strong column-weak beam criteria is satisfied.

6g. **Check column panel zone strength.**

Column panel zone strength is evaluated per FEMA §7.5.2.6. FEMA-267A modifies the panel zone provisions of UBC §2213.7.2. The provision (in the 1994 UBC) allowing panel zone strength to be proportioned for "…. gravity loads plus 1.85 times the prescribed seismic forces …" has been *eliminated*. This modification produces stiffer/stronger panel zones than previously permitted under the UBC. Heavier columns are often preferable to use of doubler plates. Thus, panel zone strength may well dictate the selection of column sizes. (**Note:** In FEMA-350, this criteria has changed again to produce balanced yielding between the beam and panel zone, such that yielding initiates in the panel zone simultaneously—or slightly after—yielding in the RBS. This is compatible with, but not identical to, the FEMA-267 procedures.)

Per FEMA §7.5.2.6, the panel zone (Figure 3A-16) is to be capable of resisting the shear required to develop $(0.8\Sigma M_f)$ of the girders framing into the joint (where M_f is the moment at the face of the column). The panel zone shear strength is derived as follows:

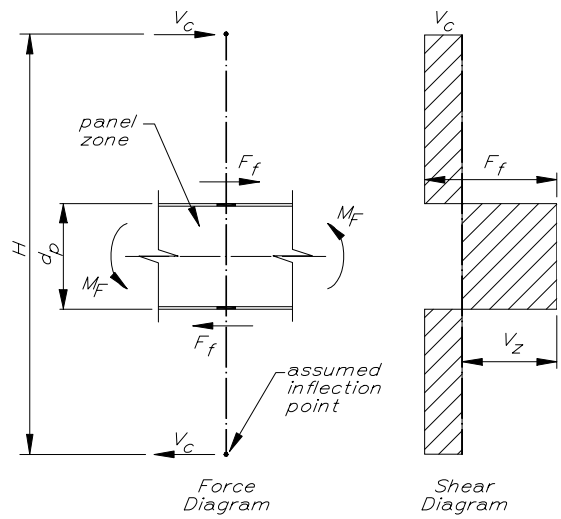

Figure 3A-16. Panel zone forces

$$H = 2(66.1) + 29.83 = 162 \text{ in.}$$

$$d_p = 29.83 - 0.76/2 = 29.45 \text{ in.}$$

$$M_f = 17{,}178 \text{ kip-in. (see Part 6d)}$$

$$V_C = \frac{2[0.8(M_f)]}{H} = \frac{2(0.8)(17{,}178)}{162} = 170 \text{ kips}$$

$$F_f = \frac{2(0.8)\Sigma M_f}{d_p} = \frac{2(0.8)(17{,}178)}{29.45} = 933 \text{ kips}$$

$$V_Z = F_f - V_C = 933 - 170 = 763 \text{ kips}$$

The panel zone shear strength is determined from §2213.7.2.1.

$$V = 0.55 F_y d_c t \left[1 + \frac{3 b_c t_{cf}^2}{d_b d_c t} \right] \tag{13-1}$$

where:

$b_c =$ width of the column flange

$d_b =$ depth of the beam

$d_c =$ column depth

$t_{cf} =$ thickness of the column flange

$t =$ total thickness of the panel zone, including doubler plates

For the $W14\times283$ column, the panel zone shear strength is:

$$V = 0.55(50)(16.74)(1.29)\left[1+\frac{3(16.11)(2.07)^2}{(29.83)(16.74)(1.29)}\right] = \underline{\underline{785}} > 763\,\text{kips} \qquad o.k. \qquad (13\text{-}1)$$

The $W14\times283$ column panel zone strength is just adequate when matched with the $W30\times108$ beam *without* doubler plates. Again, this configuration is selected in lieu of a lighter column with doubler plates as the most economical design. Note that if the design does include doubler plates, then compliance with §2213.7.2.3 is required.

The minimum panel zone thickness t_z is also checked per §2213.7.2.2:

$$t_z \geq (d_z + w_z)/90$$

where:

$d_z =$ panel zone depth between continuity plates

$w_z =$ panel zone width between column flanges

$t_z = 1.29''$ for $W14\times283$

$$t_z = 1.29'' \geq [(29.73-0.76)+(16.74-2.07)/90] = 0.48 \text{ in.} \qquad o.k. \qquad (13\text{-}2)$$

6h. Check column continuity plates.

Subject to further research, FEMA-267 §7.8.3 recommends that continuity plates *always* be provided. The plate thickness should match the beam flange thickness. Complete penetration welds from the continuity plate to the column flanges are recommended, and fillet welds to the column web are acceptable. (**Note:** In FEMA-350, this criteria has been relaxed, permitting omission of continuity plates for columns with heavy flanges.)

The minimum continuity plate area is validated for conformance with §2213.7.4 using AISC-ASD Section K1.8, Equation K1-9. UBC §2213.7.4 stipulates that for this equation the value for P_{bf} is to be taken as: $(1.8bt_f F_y)$.

For $W30\times108$:

$$P_{bf} = 1.8(0.76)(10.48)(50) = 717\,\text{kips} \qquad \text{§2213.7.4}$$

AISC-ASD Eq. (K1-9) yields:

$$A_{st} = \frac{P_{bf} - F_{yc}t_{wc}(t_b + 5k)}{F_{yst}} = \frac{717 - 50(1.29)[0.76 + 5(2.75)]}{50} = -4.38$$

As the area calculated is negative, stiffeners are not required per Equation K1-9 of AISC-ASD, and continuity plates with a thickness matching the beam flange are adequate.

With complete penetration welds to the column flanges, the continuity plate corners should be clipped to avoid the column *k*-area. This leaves a fillet weld length to the column web of:

$$l_w = d_c - 2(k) = 16.74 - 2(2.75) = 11.2 \text{ in.}$$

The fillet weld to the column web is designed for the tensile strength of the continuity plate. Using a $\frac{3}{4}''\times7''$ plate on each side of the web (top and bottom), the weld size is determined.

Plate strength:

$$P_{st} = 0.75(7.0)50.0 = 263\,\text{kips}$$

Weld size (16ths):

$$n = \frac{P_{st}}{2l_w(1.7)(0.928)} = \frac{(263)}{2(11.2)(1.7)(0.928)} = 7.4$$

where weld strength per 1/16th inch with E70XX electrodes is
0.3(70 ksi) (1/16) (.707) = 0.928 kip-in. per AISC-ASD Table J2.5.

∴ Use a ½" fillet top and bottom of continuity plate to column web.

6i. Evaluate beam-to-column joint restraint. §2213.7.7

To preclude SMRF column members from out-of-plane or lateral torsional buckling, §2213.7.7 specifies requirements for beam-column joint restraint. The $W14\times283$ frame column has a perpendicular beam framing into it at each level, providing both column lateral support and joint restraint. The column flanges need to be laterally supported only at the beam top flange if the column remains elastic. By satisfying one of the four conditions listed in §2213.7.7.1, a column may be considered elastic for purposes of determining lateral bracing.

Check condition #1: Strong column-weak beam strength ratio > 1.25

From a review of Part 6f above: (strength ratio) = 1.74 > 1.25 *o.k.*

The column flanges therefore need lateral bracing only at the beam top flange. The bracing force is taken at 1 percent of the beam flange capacity, perpendicular to the plane of the frame. By observation, the bolted connection from the beam framing perpendicular to the column is adequate.

6j. Provide beam lateral bracing at RBS flange cut. FEMA §7.5.3.5

Lateral bracing is next considered for the beam flanges adjacent to the RBS cut. As stated in FEMA §7.5.3.5, lateral braces for the top and bottom beam flanges are to be placed within *d*/2 of the reduced section. (**Note:** This requirement is dropped in FEMA-350 when a composite concrete slab is present.)

Lateral support of the top flange is ordinarily provided by shear studs to the concrete fill over metal deck. Either diagonal angle bracing or perpendicular beams can provide bottom flange lateral bracing. Generally, bracing elements may be designed for about 2 percent of the compressive capacity of the member being braced. Figure 3A-17 shows an example for angle bracing of the bottom flange.

6k. Detailing considerations.

As noted in FEMA-267A, the reduced beam section SMRF design entails a few unique considerations:

- At the cut edge of the reduced section, the beam flange should be ground parallel to the flange to a mirror finish (surface roughness < 1000 per ANSI B46.1).
- Shear studs should be omitted over the length of the cut in the beam top flange, to minimize any slab influence on beam hinging.
- A 1-inch-wide gap should be placed all around the column so as to the slab to reduce the slab interaction with the column connection. (**Note:** FEMA-350 has relaxed this requirement.)

6l. Welding specifications.

To ensure that the SMRF joint welded connections are of the highest possible quality, the design engineer must prepare and issue project-specific welding specifications as part of the construction documents. The guidelines presented in FEMA-267, Section 8.2 provide a comprehensive discussion of welding specifications. For an itemized list of welding requirements, see California Division of the State Architect (DSA), Interpretation of Regulations #27-8, Section K – Welding. A few of these requirements are noted below:

- The steel fabricator is to prepare and submit a project Welding Procedure Specification (WPS) per AWS D1.1, Chapter 5 for review by the inspector and Engineer of Record.
- Weld filler materials are to have a rated toughness, recommended at 20ft-lbs. absorbed energy at -20° F per Charpy V-notch test.
- Pre-heat and interpass temperatures are to be strictly observed per AWS D1.1, Chapter 4.2, and verified by the project inspector.
- Weld dams are prohibited, and back-up bars (if used) should be removed, the weld back-gouged, and a reinforced with a fillet weld.
- All complete penetration welds shall be examined with ultrasonic testing/inspection for their full length.

6m. Tests and inspections.

Quality control is presented in Chapter 9 of FEMA-267. Guidelines are presented for inspector qualifications, as well as suggested scope of duties for the inspector, engineer and contractor. The extent of testing is discussed, with a recommendation that the contract documents clearly identify the required testing. An example Quality Assurance Program is given in FEMA §9.2.7. It is recommended that the structural engineer incorporate similar requirements into the project specifications.

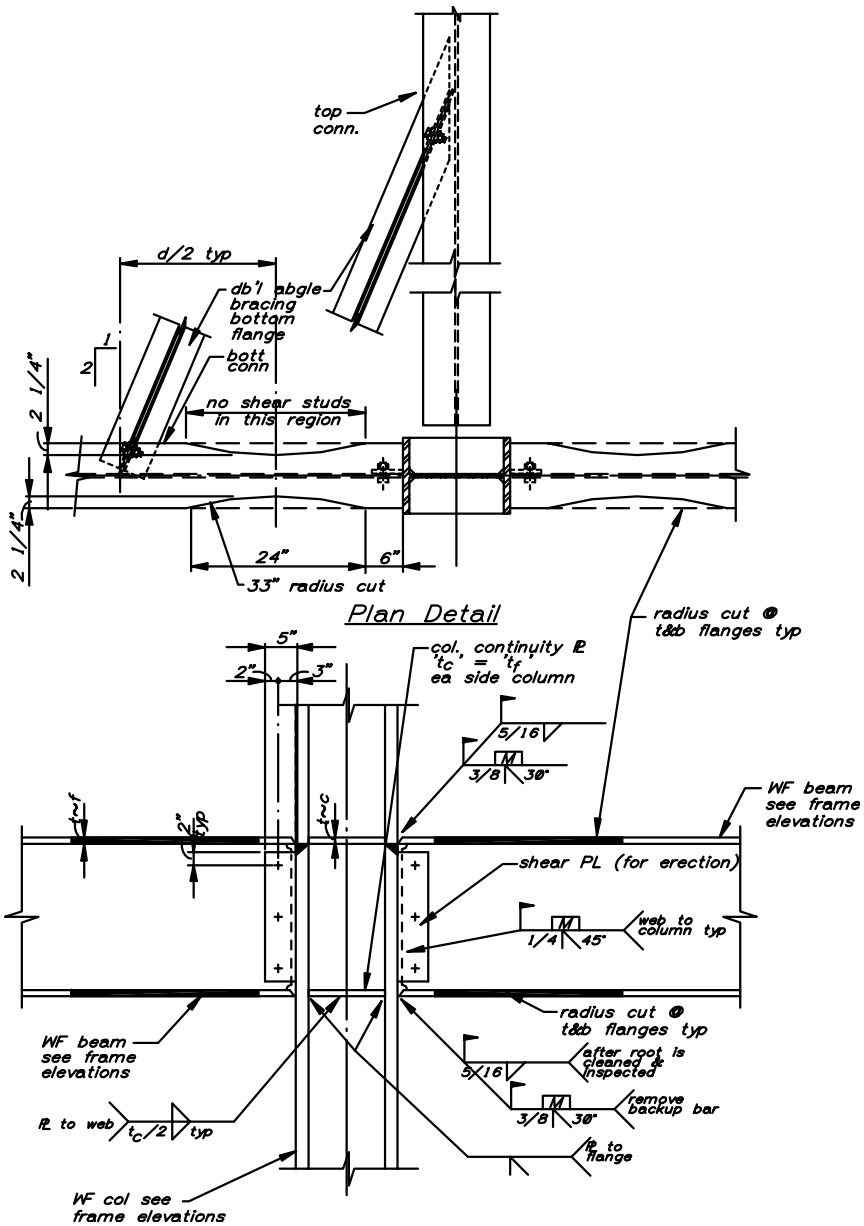

Figure 3A-17. Reduced beam section joint detail

References

AISC, 1997, 1999. *Seismic Provisions for Structural Steel Buildings.* American Institute of Steel Construction, April 1997 with Supplement No. 1, February 1999,

DSA IR 27-8, 1998. *Interpretation of Regulations 27-8.* California Division of the State Architect, Sacramento, California.

Englehardt, M., 1998. *Design Recommendations for Radius Cut Reduced Beam Section Moment Connections.* University of Texas, Austin.

Englehardt, M., et al., 1996. "The Dogbone Connection, Part II," *Modern Steel Construction*. American Institute of Steel Construction.

FEMA-267, 1995. *Interim Guidelines: Evaluation, Repair, Modification, and Design of Welded Steel Moment Frame Structures.* SAC Joint Venture, funded by the Federal Emergency Management Agency, Washington, D.C.

FEMA-267A, 1997. *Interim Guidelines Advisory No. 1*, Supplement to FEMA-267, Federal Emergency Management Agency, Washington, D.C.

FEMA-267B, 1999. *Interim Guidelines Advisory No. 2*, Supplement to FEMA-267, Federal Emergency Management Agency, Washington, D.C.

Steel Tips, 1999. "Design of Reduced Beam Section (RBS/Moment Frame Connections," *Steel Tips.* Structural Steel Educational Council, Moraga, California.

Design Example 3B
Steel Ordinary Moment Resisting Frame

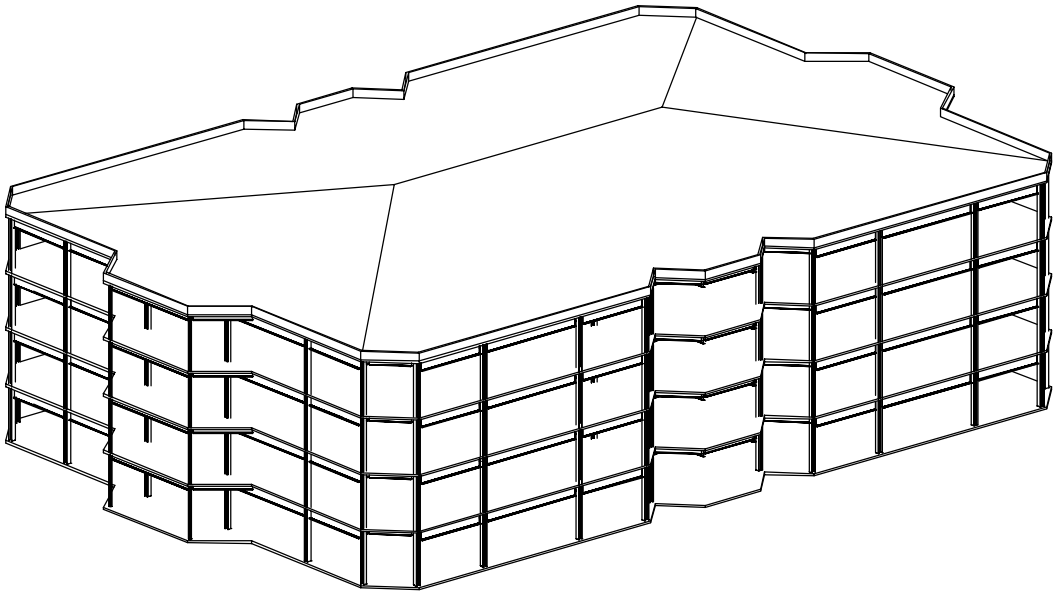

Figure 3B-1. Four story steel office building with steel ordinary moment resisting frames (OMRF)

Foreword

Steel ordinary moment resisting frames (OMRF) differ from special moment resisting frames (SMRF) in several important ways. The most significant differences lie in the details of the beam-column joints and in the consideration of strong column-weak beam effects in member selection. Because of these and other factors, the SMRF structure has a higher R-factor (8.5) and no height limit, while OMRF structures have a low R-factor (4.5) and are limited to 160 feet in height. In general, SMRF structures are expected to perform much better in earthquakes than OMRF structures.

This Design Example uses the same 4-story structure used in Design Example 3A to illustrate design of a steel OMRF. The choice of this structure was based on both convenience and the fact that the differences between OMRFs and SMRFs could be easily shown.

It should be noted, however, that SEAOC *does not recommend* use of steel OMRFs in buildings over two stories. In fact, SEAOC recommends use of SMRFs in all steel moment frame structures of any height, particularly mid-rise and taller structures, in high seismic regions. Typical uses of OMRF systems in high seismic regions include structures such as one-story open front retail buildings, two-story residential structures with open lower levels, penthouses and small buildings.

Overview

Steel ordinary moment resisting frames are required to meet the provisions of §2213.6. The OMRF requirements are essentially the same as stipulated in prior UBC editions, and were not addressed in the emergency code amendment for SMRF design issued in the 1996 Supplement to the 1994 UBC. However, both the SEAOC Blue Book and FEMA-267 recommend *against* the use of OMRFs in areas of high seismicity. The OMRF provisions are retained in the code for use in light on- or two-story buildings, and structures in low seismic hazard zones.

The UBC requires OMRFs to be designed for about twice the lateral seismic force that would be required for a SMRF in the same structure. As such, the plastic rotation demand for OMRF connections should be roughly half that of the SMRF. The connection ductility requirements for OMRFs are therefore less stringent than for SMRFs. Notwithstanding code provisions, OMRF connections should receive similar attention to joint detailing as for SMRFs. In particular, lessons learned from the Northridge earthquake concerning weld procedures and filler materials should also be applied to OMRFs.

As suggested in FEMA-267 (see p.7-2), OMRFs in areas of high seismicity may be acceptable if the connections are designed to remain *elastic* for the design level earthquake, while the beam and column members are designed per UBC OMRF requirements. This can be achieved by applying an R factor of 1 in deriving design base shear and confirming that the connection stresses do not exceed yield. This enhanced OMRF design approach is also illustrated in this Design Example.

This Design Example uses the 4-story steel office structure from Design Example 3A to illustrate OMRF design. The same building weights, frame elevations and site seismicity are used as for Design Example 3A. Although this Design Example is for a 4-story structure, the design procedure is applicable to all OMRFs, including such uses as one-story, single bent frames at garage door openings.

It is recommended that the reader first review Design Example 3A before reading this Design Example. Refer to Example 3A for plans and elevations of the structure.

Outline

This Design Example illustrates the following parts of the design process:

1. **Design base shear.**
2. **Distribution of lateral forces.**
3. **Interstory drift.**
4. **OMRF member design.**
5. **OMRF beam-column joint design.**

Calculations and Discussion — *Code Reference*

1. Design base shear.

1a. Classify structural system and determine seismic factors. **§1629.6**

The structure is a building frame system with lateral resistance provided by steel ordinary moment resisting frames (system type 3.4.a of Table 16-N). The seismic factors are:

$R = 4.5$ Table 16-N

$\Omega = 2.8$

$h_{max} = 160\,\text{ft}$

1b. Determine seismic response coefficients C_a and C_v. **§1629.4.3**

For Zone 4 and Soil Profile Type S_D:

$C_a = 0.44(N_a) = 0.44(1.0) = \underline{\underline{0.44}}$ Table 16-Q

$C_v = 0.64(N_v) = 0.64(1.0) = \underline{\underline{0.64}}$ Table 16-R

1c. **Evaluate structure period T.** **§1630.2.2**

Per Method A: (30-8)

$$T = C_t (h_n)^{3/4}$$

$$C_t = 0.035$$

$$T_A = 0.03(55.5)^{3/4} = 0.71\text{sec}$$

Per Method B:

From Design Example 3A, assuming we retain the same beam and column sizes:

North-south:

$$(y): T_{By} = 1.30\,\text{sec}$$ §1630.2.2

East-west:

$$(x): T_{Bx} = 1.16\,\text{sec}$$ Para. #2

For Seismic Zone 4, the value for Method B cannot exceed 130 percent of the Method A period. Consequently,

$$\text{Maximum value for } T_B = 1.3T_A = 1.3(0.71) = \underline{\underline{0.92\,\text{sec}}}$$

1d. **Determine design base shear.**

The total design base shear for a given direction is:

$$V = \frac{C_v I}{RT} W = \frac{0.64(1.0)}{4.5(0.92)} W = 0.155W \qquad (30\text{-}4)$$

The base shear need not exceed:

$$V = \frac{2.5 C_a I}{R} W = \frac{2.5(0.44)(1.0)}{4.5} W = 0.244W \qquad (30\text{-}5)$$

But the base shear shall not be less than:

$$V = 0.11C_a IW = 0.11(0.44)(1.0)W = 0.048W \tag{30-6}$$

And for Zone 4, base shear shall not be less than:

$$V = \frac{0.8ZN_v I}{R}W = \frac{0.8(0.4)(1.0)(1.0)}{4.5} = 0.071W \tag{30-7}$$

Equation (30-4) governs base shear.

$$\therefore V = \underline{\underline{0.155W}} \tag{30-4}$$

1e. **Determine earthquake load combinations.** **§1630.1**

Reliability/redundancy factor: $\rho = 2 - \dfrac{20}{r_{\max}\sqrt{A_b}}$ (30-3)

From Design Example 3A, use $\rho = \underline{\underline{1.25}}$.

For the load combinations §1612, and anticipating using allowable stress design (ASD) for the frame design:

$$E = \rho E_h + E_v = 1.25(V) \tag{30-1}$$

($E_v = 0$ for allowable stress design)

$$E_m = \Omega E_h = 2.8(V) \tag{30-2}$$

Note that seismic forces may be assumed to act nonconcurrently in each principal direction of the structure, except as per §1633.1.

2. Distribution of lateral forces.

2a. Building weights and mass distribution (from Design Example 3A).

Table 3B-1. Mass properties summary

Level	W (kips)	X_{cg} (ft)	Y_{cg} (ft)	M (k-sec ^{2} / in.)	MMI (k-sec ^{2}-in.)
Roof	2,066	100	70	5.3	26,556
4th	2,235	100	70	5.8	28,728
3rd	2,235	100	70	5.8	28,728
2nd	2,235	100	70	5.8	28,728
Total	8,771			22.7	

2b. Determine design base shear.

As noted above, Equation (30-4) governs, and:

$$V = 0.155W = 0.155(8{,}771) = \underline{\underline{1{,}360\,\text{kips}}} \qquad (30\text{-}4)$$

2c. Determine vertical distribution of force.

For the static lateral force procedure, vertical distribution of force to each level is applied as follows:

$$V = F_t + \sum F_i \qquad (30\text{-}13)$$

where:

$$F_t = 0.07T(V) \le 0.25(V)$$

Except $F_t = 0$

where:

$$T \le 0.7\,\text{sec}$$

For this example structure:

$$T = 0.92\,\text{sec}$$

$$\therefore\ F_t = 0.07\,(0.92)(1{,}360) = 87.6\,\text{kips}$$

The concentrated force F_t is applied at the roof, in addition to that portion of the balance of the base shear distributed to each level per §1630.5:

$$F_x = \frac{(V - F_t)W_x h_x}{\sum W_i h_i} = (1{,}360 - 87.6)\left(\frac{W_x h_x}{\sum W_i h_i}\right) \tag{30-15}$$

Table 3B-2. Vertical distribution of shear

Level	w_x *(kips)*	h_x *(ft)*	$w_x h_x$ *(k-ft)*	$\frac{w_x h_x}{\Sigma wx}$	F_x *(kips)*	ΣV *(kips)*
Roof	2,066	55.5	114,663	0.375	564.8	
4th	2,235	42.0	93,870	0.307	390.6	564.8
3rd	2,235	28.5	63,698	0.208	265.1	955.4
2nd	2,235	15.0	33,525	0.110	139.5	1,220.5
Total	8,771		305,756	1.000	1,360.0	1,360.0

Note: F_{roof} = 0.375 (1,272.4) + 87.6 = 564.8 kips

2d. **Determine horizontal distribution of shear.**

As in Design Example 3A, the direct seismic force, F_x, applied at the center of mass is combined with an accidental torsional moment, M_t, using a 5 percent eccentricity, at each level. This is shown in Table 3B-3.

North-south:

$$M_t = 0.05(204')F_x = (10.2)F_x$$

East-west:

$$M_t = 0.05(144')F_x = (7.2)F_x$$

Table 3B-3. Horizontal distribution of shear

Level	F_x (kips)	N-S M_t (k-ft)	E-W M_t (k-ft)
Roof	564.8	5,761	4,067
4th	390.6	3,984	2,812
3rd	265.1	2,704	1,909
2nd	139.5	1,423	1,004

Note: M_t = horizontal torsional moment

With the direct seismic forces and torsional moments given in Table 3B-3 above, the force distribution to the frames is generated by computer analysis (not shown). For this Design Example, the beam and column sizes from Design Example 3A are used in the computer model.

From the computer analysis, the shear force at the ground level is determined for each frame column. Frame forces at the base of frame types A1 and B1 are summarized in Tables 3B-4 and 3B-5.

Table 3B-4. North-south direction, frame type A1

Column Shears (kips)	Line A/1.2 (kips)	Line A/2 (kips)	Line A/3 (kips)	Line A/4 (kips)	Line A/5 (kips)	Line A/5.8 (kips)	Total (kips)
Direct Seismic	79.4	143.1	132.6	132.6	143.1	79.4	710.2
Torsion Force	4.9	8.8	8.2	8.2	8.8	4.9	43.8
Direct + Torsion	84.3	151.9	140.8	140.8	151.9	84.3	754.0

Table 3B-5. East-west direction, frame type B1

Column Shears (kips)	Line 1/A.2 (kips)	Line 1/B (kips)	Line 1/C (kips)	Line 1/C.8 (kips)	Total (kips)
Direct Seismic	63.1	113.1	113.1	63.1	352.4
Torsion Force	2.4	4.3	4.3	2.4	13.4
Direct + Torsion	65.5	117.4	117.4	65.5	365.8

3. Interstory drift.

3a. Determine Δ_S and Δ_M. §1630.9

The design level response displacement Δ_S is obtained from a static-elastic analysis using the design seismic forces derived above. For purposes of displacement determination, however, §1630.10.3 eliminates the upper limit on T_B, used to determine design base shear under Equation (30-4). The maximum inelastic response displacement Δ_M includes both elastic and estimated inelastic drifts resulting from the design basis ground motion. It is computed as follows:

$$\Delta_M = 0.7(R)\Delta_S = 0.7(4.5)\Delta_S = 3.15\Delta_S \tag{30-17}$$

The maximum values for Δ_S and Δ_M are determined, including torsional effects (and including $P\Delta$ effects for Δ_M). Without the $1.3T_A$ limit on T_B, the design base shear per Equation (30-4) is:

North-south:

$$T_{By} = 1.30\,\text{sec}$$

$$V_{n-s} = \frac{C_v I}{RT}W = \frac{0.64(1.0)}{4.5(1.30)}W = 0.109W = \underline{\underline{956\,\text{kips}}} \tag{30-4}$$

East-west:

$$T_{Bx} = 1.16\,\text{sec}$$

$$V_{e-w} = \frac{C_v I}{RT}W = \frac{0.64(1.0)}{4.5(1.16)}W = 0.123W = \underline{\underline{1{,}079\,\text{kips}}} \qquad \text{§1630.1.1}$$

Note that §1630.1.1 stipulates use of the unfactored base shear (V), with $\rho = 1$. Using these modified design base shears, the accidental torsion and force distribution to each level are adjusted for input to the computer model. The structure displacements and drift ratios are derived below in Table 3B-6.

Table 3B-6. Interstory displacements

North-South Interstory Displacements				
Story	*Height h (in.)*	*Δ_S drift (in.)*	*Δ_M drift (in.)*	*Drift Ratio (Δ_M/h)*
4th	162	(2.41 -2.06)= 0.35	1.10	0.0068
3rd	162	(2.06 -1.52)= 0.54	1.70	0.0105
2nd	162	(1.52 -0.82)= 0.70	2.21	0.0136
1st	180	(0.82 -0.0) = 0.82	2.58	0.0143
East-West Interstory Displacements				
Story	*Height h (in.)*	*Δ_S drift (in.)*	*Δ_M drift (in.)*	*Drift Ratio (Δ_M/h)*
4th	162	(2.24 -1.92)= 0.32	1.01	0.0062
3rd	162	(1.92 -1.41)= 0.51	1.61	0.0099
2nd	162	(1.41 -0.77)= 0.64	2.01	0.0124
1st	180	(0.77 -0.0) = 0.77	2.43	0.0135

Note: Interstory drift ratio = Δ_M/story height

3b. **Determine the story drift limitation.** **§1630.10**

For structures with $T > 0.7$ seconds, the maximum allowable drift is: $\Delta_M = 0.020$ (story height) per §1630.10.2. A review of the drift ratios tabulated above in Table 3B-6 shows that all interstory drift ratios are less than 0.020, using the actual period T_B in base shear Equation (30-4). The maximum drift ratio of 0.0143 occurs at the first story in the north-south direction, and is a little more than 70 percent of the 0.020 allowable.

As expected, the maximum Δ_M displacements for the OMRF are very close to the values for the SMRF from Design Example 3A. At this point in the design process, the beam and column sizes could be reduced to make the displacements closer to the code limit. However, using more conservative Δ_M drift ratios produces stiffer frame designs, which mitigates possible deformation compatibility issues in other elements such as cladding and non-frame $(P\Delta)$ column design. The same beam and column sizes previously selected will be retained. The next step will be to check member stress levels.

4. **OMRF member design.** **§2213.6**

Using the $W30\times108$ beam and $W14\times283$ column from Design Example 3A (see Figure 3A-3 for frame on Line A) for preliminary sizes, the OMRF frame members are designed per §2213.6.

4a. **Design typical beam at 3rd floor.**

The typical beam designed is the third floor beam shown in Figure 3B-2.

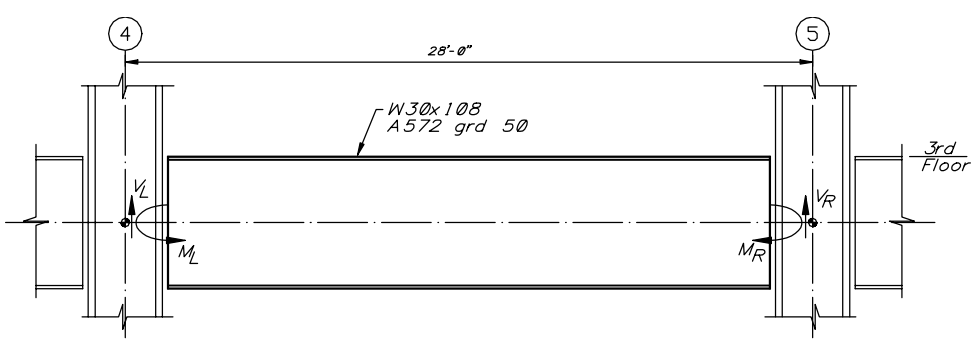

Figure 3B-2. Typical beam at third floor of Frame A1

From a review of the computer output (not shown), the moments and shears at the right end of the beam are greatest. Note that the seismic moment and shear are about twice that for the SMRF example. The moments and shears, at the face of the column at Line 5 are:

$$M_{DL} = 1{,}042 \text{ kip-in.}$$

$$M_{LL} = 924 \text{ kip-in.}$$

$$M_{seis} = 6{,}780 \text{ kip-in.}$$

$$M_E = \rho M_{seis} = 1.25(6{,}780) = \pm 8{,}475 \text{ kip-in.}$$

$$V_{DL} = 16.4 \text{ kips}$$

$$V_{LL} = 13.3 \text{ kips}$$

$$V_{seis} = 42.2 \text{ kips}$$

$$V_E = \rho V_{seis} = 1.25(42.2) = \pm 52.7 \text{ kips} \qquad \text{§1630.1.1}$$

Using the basic load combinations of §1612.3.1 (ASD), with no one-third increase.

$$D + L: \quad M_{D+L} = 1{,}042 + 924 = 1{,}966 \text{ kip-in.} \qquad (12\text{-}8)$$

$$V_{D+L} = 16.4 + 13.3 = 29.7 \text{ kips}$$

$$D + \frac{E}{1.4}: \quad M_{D+E} = 1{,}042 + \frac{8{,}475}{1.4} = 7{,}096 \text{ kip-in.} \qquad (12\text{-}9)$$

$$V_{D+E} = 16.4 + \frac{52.7}{1.4} = 54.0 \text{ kips}$$

$$D + 0.75\left[L + \left(\frac{E}{1.4}\right)\right]: \quad M_{D+L+E} = 1{,}042 + 0.75\left[924 + \left(\frac{8{,}475}{1.4}\right)\right] = 6{,}275 \text{ kip-in.} \qquad (12\text{-}11)$$

$$V_{D+L+E} = 16.4 + 0.75\left[13.3 + \left(\frac{52.7}{1.4}\right)\right] = 54.6 \text{ kips}$$

Try $W30 \times 108$, ASTM A572, Grade 50 beam.

Check flange width-thickness ratios per AISC-ASD, Table B5.1 (**Note:** AISC-ASD is adopted, with amendments, in Division III of the code):

$$\frac{b_f}{2t_f} \le \frac{65}{\sqrt{50}} = 9.19$$

and:

$$\frac{d}{t_w} \le \frac{640}{\sqrt{50}} = 90.5$$

For $W30\times108$: $\dfrac{b_f}{2t_f} = 6.9 < 9.19 \quad o.k.$

And:

$$\frac{d}{t_w} = \frac{29.83}{0.545} = 54.7 < 90.5 \quad o.k.$$

As in Design Example 3A, provide beam bracing at one-third points. The maximum unbraced length is:

$$L = 28.0/3 = 9.33\,\text{ft}$$

Check allowable moment capacity.

From AISC-ASD, p. 2-10; for $W30\times108$:

$$L_u = 9.8 > 9.33$$

$$\therefore\ F_b = 0.60(F_y) = 30.0\,\text{ks}$$

Allowable $M_a = 299(30.0) = 8{,}970$ kip-in. $> 7{,}096$ kip-in. $\quad o.k.$

Check allowable shear capacity.

For $W30\times108$:

$$\frac{h}{t_w} = \frac{29.83 - 2(0.76)}{0.545} = 51.9 < \frac{380}{\sqrt{50}} = 53.7$$

$$\therefore F_v = 0.4(F_y) = 0.4(50) = 20.0\,\text{ksi}$$

Allowable $V_a = 20.0(0.545)(29.83) = 325\,\text{kips} > 54.6\,\text{kips}$ *o.k.*

$\therefore$ Use $W30\times108$ beam

4b. **Design typical column at 2nd story.**

The column to be designed is the second-story column of Frame A1 shown in Figure 3B-3. For the 2nd story column at Line 5, the maximum column forces generated by the OMRF frame analysis (not shown) are:

$M_{DL} = 236$ kip-in.

$M_{LL} = 201$ kip-in.

$M_{seis} = 7{,}501$ kip-in.

$M_E = 1.25(7{,}501) = 9{,}376$ kip-in.

$V_{DL} = 3.1\,\text{kips}$

$V_{LL} = 2.7\,\text{kips}$

$V_{seis} = 107\,\text{kips}$

$V_E = 1.25(107) = 134\,\text{kips}$

$P_{DL} = 113\,\text{kips}$

$P_{LL} = 75\,\text{kips}$

$P_{seis} = 53\,\text{kips}$

$P_E = 1.25(53) = 66\,\text{kips}$

The maximum strong axis moments occur at the bottom of the column, and are taken at the top flange of the beam.

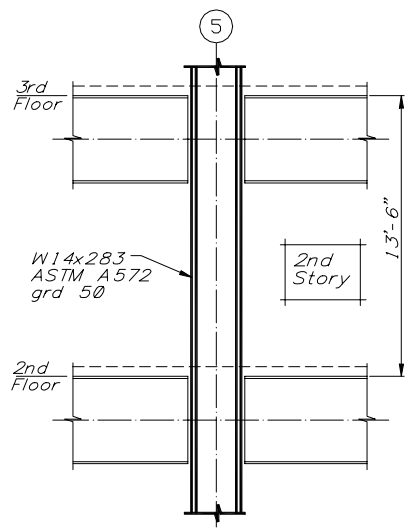

Figure 3B-3. Typical second-story column of Frame A1

Using the basic load combinations of §1612.3.1:

$$D+L: \quad M_{D+L} = 236 + 201 = 437 \text{ kip-in.} \tag{12-8}$$

$$P_{D+L} = 113 + 75 = 188 \text{ kips}$$

$$V_{D+L} = 3.1 + 2.7 = 5.8 \text{ kips}$$

$$D + \frac{E}{1.4}: \quad M_{D+E} = 236 + \frac{9{,}376}{1.4} = 6{,}933 \text{ kip-in.} \tag{12-9}$$

$$P_{D+E} = 113 + \frac{66}{1.4} = 160 \text{ kips}$$

$$V_{D+E} = 3.1 + \frac{134}{1.4} = 99 \text{ kips}$$

$$0.9D - \frac{E}{1.4}: \quad P_{D-E} = 0.9(113) - \frac{66}{1.4} = 54.5 \text{ kips compression} \tag{12-10}$$

$$D+0.75\left[L+\left(\frac{E}{1.4}\right)\right]: \quad M_{D+L+E}=236+0.75\left[201+\left(\frac{9{,}376}{1.4}\right)\right]=5{,}410\,\text{kip-in.} \tag{12-11}$$

$$V_{D+L+E}=3.1+0.75\left[2.7+\frac{134}{1.4}\right]=77\,\text{kips}$$

$$P_{D+L+E}=113+0.75\left[75+\left(\frac{66}{1.4}\right)\right]=205\,\text{kips}$$

Under the requirements of §2213.5.1, columns must have the strength to resist the following axial load combinations (neglecting flexure):

$$P_{DL}+0.7P_{LL}+\Omega P_{seis}: P_{comp}=113+0.7(75)+2.8(53)=314\,\text{kips compression}$$

$$0.85P_{DL}-\Omega P_{seis}: \qquad P_{tens}=0.85(113)-2.8(53)=-52\,\text{kips tension}$$

Try $W14\times283$, ASTM A572, Grade 50 column:

Unbraced column height:

$$h=13.5-(2.5/2)=12.25\,\text{ft}$$

Maximum $f_a=205/83.3=2.46\,\text{ksi}$

$$\left(\frac{k\lambda}{r}\right)_y=\frac{1.0(12)(12.25)}{4.17}=35.3$$

$$\therefore\ F_a=26.5\,\text{ksi}$$

Maximum $\dfrac{f_a}{F_a}=\dfrac{2.46}{26.5}=0.092<0.15$

Therefore, AISC-ASD Equation H1-3 is used for combined stresses.

From AISC-ASD manual (p. 3-21) for $W14\times283$, Grade 50:

$$L_c=14.4>12.5$$

$$\therefore\ F_b=0.66(F_y)=33.0\,\text{ksi}$$

Check combined stresses for the critical load combinations.

$$D+\frac{E}{1.4}:\ \frac{f_a}{F_a}+\frac{f_{bx}}{F_b}=\frac{160}{83.3(26.5)}+\frac{6{,}933}{459(33.0)}=0.073+0.458=0.530<1.0 \qquad o.k. \quad (12\text{-}9)$$

$$D+0.75\left[L+\frac{E}{1.4}\right]:\ \frac{f_a}{F_a}+\frac{f_{bx}}{F_b}=0.092+\frac{5{,}410}{459(33.0)}=0.449<1.0 \qquad o.k. \quad (12\text{-}11)$$

Check column shear capacity.

$$\text{Allowable}\ \ V_a=0.4(50)(16.74)(1.29)=432\,\text{kips}>99\,\text{kips} \qquad o.k.$$

Next, check required axial strength per §2213.5.

Compression:

$$P_{sc}=1.7P_{allow}=1.7(83.3)(26.5)=3{,}753\,\text{kips}>314\,\text{kips} \qquad o.k.$$

Tension:

$$P_{st}=F_yA=50(83.3)=4{,}165\,\text{kips}>>-52\,\text{kips} \qquad o.k.$$

$\therefore$ Use $W14\times283$ column

5. OMRF beam-column joint design. §2213.6

As shown above, the $W30\times108$ beam and $W14\times283$ column taken from the SMRF of Design Example 3A have the capacity to meet the load combinations for an OMRF per §1612.3. Section 2213.6 requires that OMRF beam-to-column connections are to either meet the SMRF connection criteria (see §2213.7.1), or be designed for gravity loads plus Ω times the calculated seismic forces.

As discussed in FEMA-267 (Section 7.1), OMRF joints may be considered acceptable if designed to remain *elastic, with an* R *of unity* (1.0). Using an R factor of 1 is marginally more stringent than multiplying the seismic forces by Ω_o. With $R=1$, it is appropriate to use the full calculated period $(T_{Bx}=1.30)$ to determine the base shear for joint design. Therefore, the north-south base shear is taken as:

$$V_{n/s}=\frac{C_vI}{RT}W=\frac{0.64(1.0)}{1.0(1.30)}W=0.492W=4{,}315\,\text{kips}$$

For an OMRF (with $\Omega = 2.8$), the UBC base shear for connection design is:

$$V_{n/s} = 2.8(0.155)W = 0.434W = 3{,}807 \text{ kips}$$

The ratio of base shears is:

$$\text{FEMA/UBC} = 4{,}315 / 3{,}807 = 1.13$$

Thus, there is a 13 percent increase with $R = 1$ as recommended in FEMA-267.

Using the unreduced seismic base shear, the beam-column joint stresses are checked to remain elastic. For this, §1612.4, Special Seismic Load Combinations, is used with a resistance factor ϕ of one.

5a. **Determine beam forces with *R*=1.**

The beam end moment and shear are scaled up to the unreduced seismic force level by the ratio of the base shears, as follows:

$$V_{E'} = \left(\frac{0.492}{0.155}\right) V_{seis} = 3.17(42.2) = 138 \text{ kips}$$

$$M_{E'} = \left(\frac{0.492}{0.155}\right) M_{seis} = 3.17(6{,}780) = 21{,}493 \text{ kip-in.}$$

The special seismic load combination from §1612.4 is:

$$1.2D + 0.5L + 1.0E_M \qquad (12\text{-}17)$$

$$M_{D+L+E} = 1.2(1{,}042) + 0.5(924) + 1.0(21{,}493) = 23{,}205 \text{ kip-in.}$$

$$V_{D+L+E} = 1.2(16.4) + 0.5(13.3) + 1.0(138) = 164 \text{ kips}$$

5b. **Check beam-to-column weld.**

As was done in Design Example 3A, the beam *webs* are to have complete-penetration welds to the column flange. (Note that this weld is shown in Figure 12-4). Note also that the flanges are reinforced with 5/16" fillet welds. Using the cross-sectional area of the beam flange and web weldments at the face of the column, the elastic section modulus S_c of the beam is calculated from information in Table 3B-7.

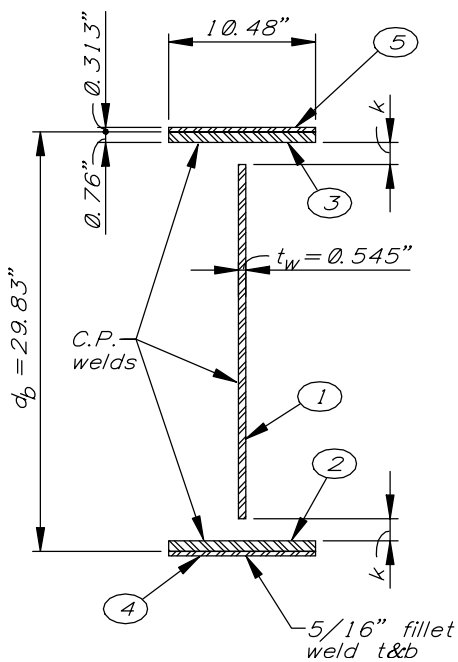

Figure 3B-4. Built-up section at column face.

Table 3B-7. Built-up section properties

Mk	Area (in.^{2})	Y (in.)	$A(y)^2$	I_o (in.^{4})
1	0.545(26.73)=14.58	0.00	0	869
2	0.76(10.48)=7.96	14.54	1,682	0
3	0.76(10.48)=7.96	14.54	1,682	0
4	0.31(10.48)=3.28	15.07	745	0
5	0.31(10.48)=3.28	15.07	745	0
Sum			4,854	869

The calculated section properties are:

$$I_c = 4{,}854 + 869 = 5{,}723\,\text{in.}^4$$

$$\therefore\ S_c = 5{,}723/15.23 = 376\,\text{in.}^3$$

Per FEMA §7.2.2.1 for complete penetration welds, the weld strength is taken as the beam yield stress of 50 ksi. The maximum weld stress is calculated using the maximum moment (M_{D+L+E}) at the face of the column:

$$f_{weld} = 23{,}205/376 = 61.7\,\text{ksi} > \phi F_y = 1.0(50) = 50\,\text{ksi} \qquad n.g.$$

The $W30\times108$ connection (weld) stresses to the column are not within the elastic limit. At this point, we can choose to either add cover plates, or make the beam larger. With similar weld patterns, a $W33\times152$ is required to obtain an adequate connection section modulus $(S_c = 575\,\text{in.}^3)$:

$$f_{weld} = 23{,}205/575 = 40.4\,\text{ksi} < 50\,\text{ksi} \qquad o.k.$$

If we choose to instead add cover plates, we would need $10''\times3/4''$ plates at the top and bottom flanges. With complete penetration welds at the cover plates to the column, the increased moment of inertia and section modulus are:

$$I_c = 5{,}723 + 2(7.5)(15.3)^2 = 9{,}234\,\text{in.}^3$$

$$S_c = 9{,}234/15.98 = 578\,\text{in.}^3$$

and:

$$f_{weld} = 23{,}205/578 = 40.1\,\text{ksi} < 50\,\text{ksi} \qquad o.k.$$

The cover plates should be about half the beam depth in length, with fillet welds to the beam flange as required to develop the tensile capacity of the plate. The minimum size for ¾" plate is a 5/16" fillet weld.

Cover plate capacity:

$$T_{Pl} = 0.75(10)(50.0) = 375\,\text{kips}$$

5/16" fillet capacity:

$$q = 1.7(0.707)(0.313)(21.0) = 7.9 \text{ kip-in.}$$

Required weld length:

$$l_w = 375/7.9 = 47'$$

Use a 20-inch long plate, which will provide for a total weld length of:

$$2(20) + 10 = 50" > 47" \quad o.k.$$

As noted above, the beam web is to have a complete penetration weld to the column face. The allowable beam shear of 325 kips from Part 4a above exceeds the unreduced seismic shear demand of 164 kips. For beam-to-column connections with bolted shear plates in lieu of welded webs, the connection plate and bolts must be designed for this maximum shear force. See Design Example 3A, Part 6g for a beam-to-column shear plate connection design.

5c. Additional considerations.

Although the UBC does not explicitly require any further OMRF connection analysis, it is good practice to check the strong column-weak beam criteria and the column panel zone shear strength. The column panel zone shear strength should be reviewed for capacity to resist the maximum beam moment from the unreduced seismic force. The strong column-weak beam analysis would be similar to that of the SMRF Design Example 3A, Part 6f. The OMRF joint should also include continuity plates, and expanded welding procedures as for the SMRF.

OMRFs designed to comply with the foregoing parameters can be expected to provide a high level of seismic performance. The objective of maintaining connection stresses within the elastic range is shown to be reasonable even for the unreduced seismic demand. The resulting frame design produces a structure that may respond to the design level ground motion without damage (i.e., plastic deformations). Moreover, OMRF designs will likely produce nominally heavier members, thereby reducing overall building drift and decreasing the potential for damage to nonstructural components.

Design Example 4
Reinforced Concrete Wall

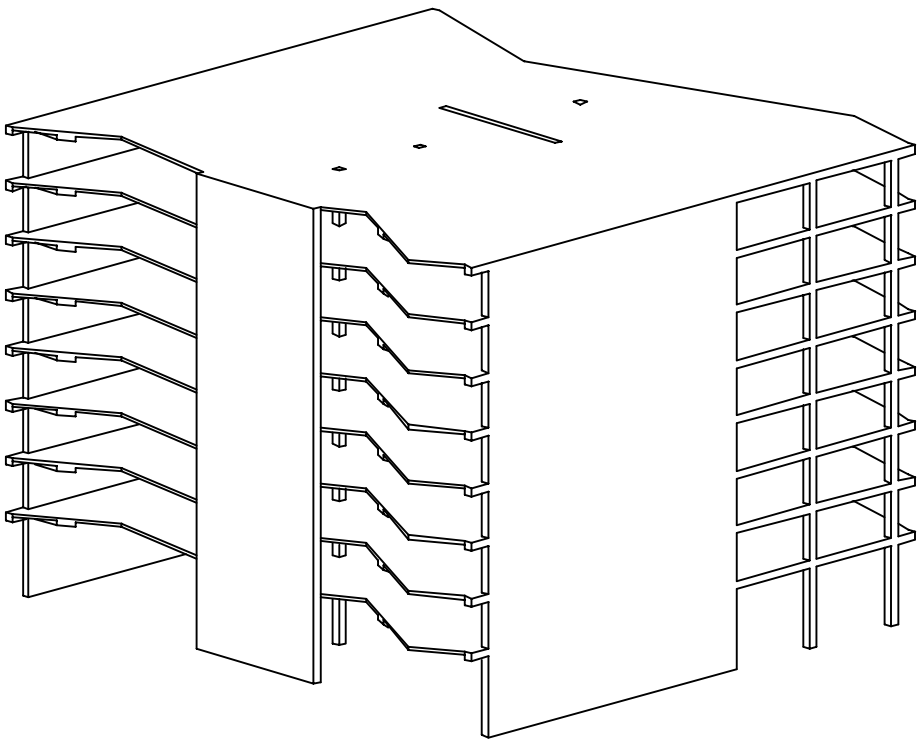

Figure 4-1. Eight-story reinforced concrete parking garage (partial view)

Overview

The structure in this Design Example is an 8-story parking garage with load-bearing reinforced concrete walls (shear walls) as its lateral force resisting system, as shown in Figure 4-1. This Design Example focuses on the design and detailing of one of the 30'-6" long walls running in the transverse building direction.

The purpose of this Design Example is twofold:

1. Demonstrate the design of a solid reinforced concrete walls for flexure and shear, including bar cut-offs and lap splices.

2. Demonstrate the design and detailing of wall boundary zones.

The Design Example assumes that design lateral forces have already been determined for the structure, and that the forces have been distributed to the walls of the structure by a hand or computer analysis. This analysis has provided the lateral displacements corresponding to the design lateral forces.

Outline

This Design Example illustrates the following parts of the design process:

1. **Load combinations for design.**
2. **Preliminary sizing of wall.**
3. **Moment strength of wall.**
4. **Lap splices and curtailment of vertical bars.**
5. **Design for shear.**
6. **Sliding shear (shear friction).**
7. **Boundary zone detailing.**

Given Information

The following information is given:

Seismic zone = 4
Soil profile type = S_D
Near field = 5 km from seismic source type A
Reliability/redundancy factor, $\rho = 1.0$
Importance factor, $I = 1.0$
Concrete strength, $f'_c = 5{,}000\,\text{psi}$
Steel yield strength, $f_y = 60\,\text{ksi}$

Figure 4-2 shows the typical floor plan of the structure. Figure 4-3 shows the wall elevation and shear and moment diagrams. The wall carries axial forces P_D (resulting from dead load including self-weight of the wall) and P_L (resulting from live load) as shown in Table 4-1. Live loads have already been reduced according to §1607.5. The shear V_E and moment M_E resulting from the design lateral earthquake forces are also shown in Table 4-1.

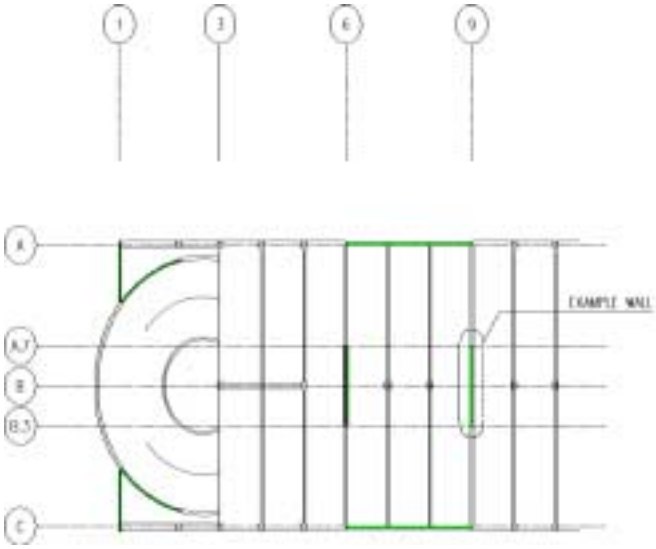

Figure 4-2. Floor plan

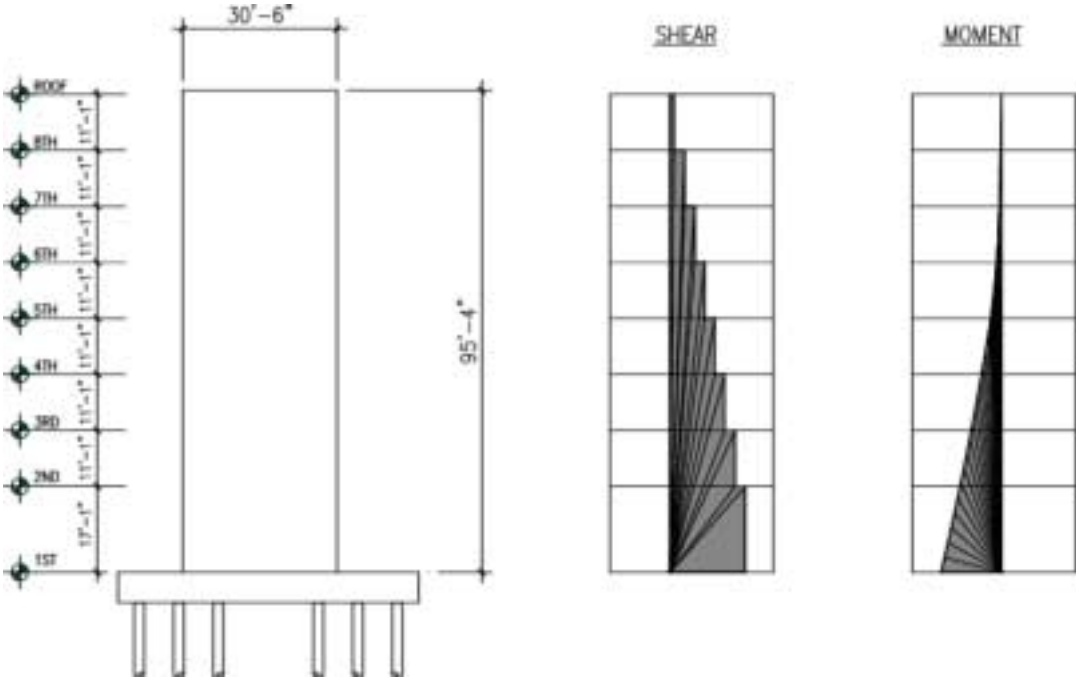

Figure 4-3. Wall elevation, shear, and moment diagram

Table 4-1. Design loads and lateral forces

Level	P_D (k)	P_L (k)	V_E (k)	M_E (k-ft)
R	216	41	96	0
8	436	81	262	960
7	643	122	438	3760
6	851	162	625	8530
5	1060	203	821	15400
4	1270	244	1030	24400
3	1470	284	1270	35600
2	1730	325	1470	49600
1			0	75500

For this Design Example, it is assumed that the foundation system is rigid and the wall can be considered to have a fixed base. The fixed-base assumption is made here primarily to simplify the example. In an actual structure, the effect of foundation flexibility and its consequences on structural deformations and strains should be considered.

Using the fixed base assumption and effective section properties, the horizontal displacement at the top of the wall, corresponding to the design lateral forces, is 2.32 inches. This displacement is needed for the detailing of boundary zones according to the UBC strain calculation procedure of §1921.6.6, which is illustrated in Part 7 of this Design Example.

The design and analysis of the structure is based on an R factor of 4.5 (UBC Table 16-N) for a bearing wall system with concrete shear walls. Concrete wall structures can also be designed using an R factor of 5.5, if an independent space frame is provided to support gravity loads. Such a frame is not used in this Design Example.

Calculations and Discussion — Code Reference

1. Load combinations for design.

Load combinations for the seismic design of concrete are given in §1612.2.1. (This is indicated in §1909.2.3, and in the definition of "Design Load Combinations" in §1921.1.) Equations (12-5) and (12-6) of UBC Chapter 16 are the seismic design load combinations to be used for concrete.

Exception 2 of §1612.2.1 states "Factored load combinations of this section multiplied by 1.1 for concrete and masonry where load combinations include seismic forces." Thus, the load combinations for Equations (12-5) and (12-6) for the seismic design of concrete can be written:

$$1.32D + 1.1E + 1.1(f_1 L + f_2 S)$$

$$0.99D \pm 1.1E$$

The factors f_1 and f_2 are defined in §1612.2.1.

The additional 1.1 factor is eliminated in the SEAOC Blue Book and in the 2000 International Building Code, for the reasons given in Blue Book §101.7.1, and as presented in the section below on SEAOC-recommended revisions to load combinations.

Load combinations for *nonseismic* loads for reinforced concrete are given in §1909.2. Equations (12-1) through (12-4) of §1612.2.1 are not used for concrete. The allowable stress design load combinations of §1612.3 are also not used for concrete design.

Horizontal and vertical components of earthquake force *E*. **§1630.1.1**

The term E in the load combinations includes horizontal and vertical components according to Equation (30-1):

$$E = \rho E_h + E_v \tag{30-1}$$

Equation (30-1) represents a vector sum, and E_v is defined as an addition to the dead load effect, D. Substituting into Equation (30-1):

$$E = \rho E_h \pm 0.5 C_a I D$$

Substituting this into the seismic load combinations for concrete gives:

$$(1.32 + 0.55 C_a I)D + 1.1\rho E_h + 1.1(f_1 L + f_2 S)$$

$$(0.99 - 0.55 C_a I)D \pm 1.1\rho E_h$$

SEAOC-recommended revisions to load combinations. **Blue Book §101.7.2.1**

SEAOC recommends revisions to the load combinations of §1612, as indicated in Blue Book §101.7.2.1. As shown in Blue Book Section C403.1, the SEAOC recommended load combinations for the seismic design of reinforced concrete omit the 1.1 multiplier, and can be written:

$$(1.2 + 0.5 C_a I)D + \rho E_h + (f_1 L + f_2 S)$$

$$0.9D \pm \rho E_h$$

Load combinations used in this Design Example.

For this Design Example, it is assumed that the local building department has indicated approval of the SEAOC recommended revisions to the UBC load combinations. For examples using the UBC load combinations instead of the SEAOC recommendations, see *Seismic Design Manual Volume II*.

Since the given structure is a parking garage, $f_1 = 1.0$, per §1612.2.1, and since there is no snow load, $S = 0$.

For Soil Profile Type S_D, Seismic Zone 4, the factor C_a is calculated as $0.44N_a$, according to Table 16-Q. From Table 16-S, the factor N_a is given as 1.2 (5km from Seismic Source Type A). However, the structure meets all of the conditions of §1629.4.2 and therefore the value of N_a need not exceed 1.1.

Thus, $C_a = 0.44(1.1) = 0.484$. With $I = 1.0$ and $\rho = 1.0$, the governing load combinations for this Design Example are:

$$[1.2 + 0.5(0.484)]D + E_h + L = 1.44D + E_h + L$$

$$0.9D \pm E_h$$

Actions at base of wall.

For the example wall, the dead and live loads cause axial load only, and the earthquake forces produce shear and moment only. The second of the above combinations gives the lower bound axial load. For a wall with axial loads below the balance point, the lower bound axial load governs the design for moment strength. (Typically, axial loads in concrete walls are well below the balance point, as is the case in this Design Example, as shown in Figure 4-8).

The governing axial load at the base of the wall is thus:

$$P_u = 0.9P_D = 0.9(1{,}730\,\text{k}) = 1{,}560\,\text{k}$$

The governing moment and shear at the base of the wall is:

$$M_u = M_E = 75{,}500\,\text{k - ft}$$

$$V_u = V_E = 1{,}470\,\text{k - ft}$$

2. Preliminary sizing of wall.

2a. Shear stress and reinforcement ratio rules of thumb.

The dimensions and required number of walls in a building can be selected by limiting the average shear stress in the walls, corresponding to factored lateral forces, to between $3\sqrt{f'_c}$ and $5\sqrt{f'_c}$. Limiting the average shear stress to between $3\sqrt{f'_c}$ and $5\sqrt{f'_c}$ helps prevent sliding shear failure of the walls. Walls with higher levels of shear stress are permitted by the UBC.

For the example wall, the maximum factored shear force equals 1470 k. Conservatively using a $3\sqrt{f'_c}$ criterion, for a wall length of 30'-6", the wall thickness equals:

$$\frac{1{,}470{,}000\#}{366'\left(3\sqrt{5{,}000}\right)\text{psi}} = 19.0 \text{ in.}$$

Say b = 20 in.

2b. Minimum wall thickness to prevent wall buckling. §1921.6.6(1.1)

For structures with tall story heights, the designer should check that the wall thickness exceeds $l_u/16$, where l_u is the clear height between floors that brace the wall out-of-plane. This is based on §1921.6.6.6, paragraph 1.1, applicable to walls that require boundary confinement. The SEAOC Blue Book Commentary (C407.5.6, page 178) recommends "that the wall boundary thickness limit of $l_u/16$ be applied at all potential plastic hinge locations, regardless of whether boundary zone confinement is required."

For the example wall, the clear height at the first story is 17 feet.

Minimum thickness $= l_u/16 = 17(12)/16 = 12.8" < 20"$ *o.k.*

2c. Layout of vertical reinforcement.

Based on brief calculations and the preliminary sizing considerations discussed here, the wall section and reinforcement layout shown in Figure 4-4 is proposed for the base of the wall:

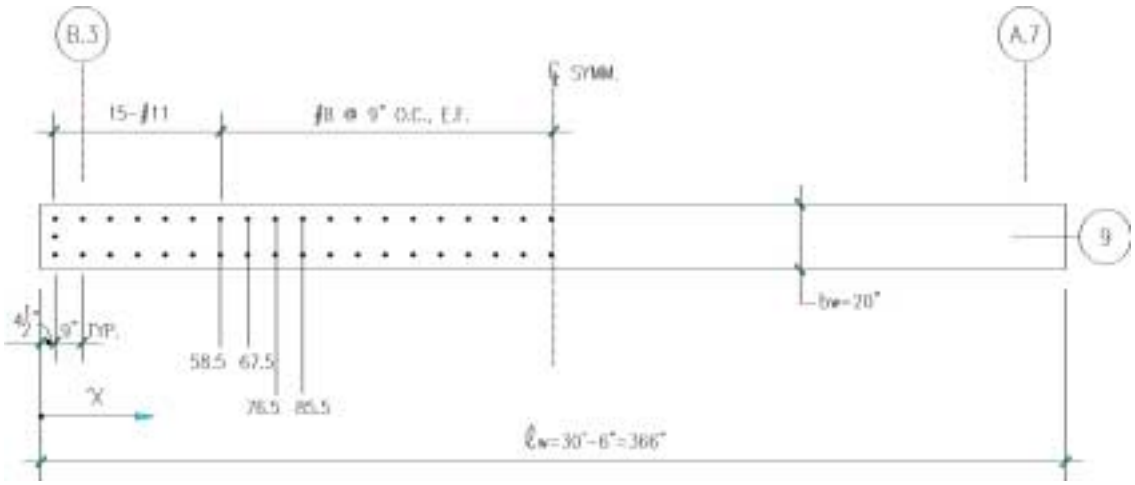

Figure 4- 4. Layout of vertical reinforcement at wall base

The reinforcement layout considers the following issues:

- Vertical bars are spaced longitudinally at 9 inches on center. This spacing exceeds $6d_b$ of the largest bars used #11: $6d_b = 6(1.41) = 8.46$ in. This offers the best conditions for lap splicing of reinforcement, as indicated in the CRSI rebar detailing chart [CRSI, 1996]. A closer spacing of vertical bars might typically be used in the boundary regions of the wall, but such a spacing could require longer lap splice lengths.

- The maximum center-to-center spacing of vertical bars is 12 inches in boundary regions of walls where confinement is needed, according to §1921.6.6.6 Paragraph 2.4. This means that at the ends of the 20-inch-thick wall, three bars are used as shown in Figure 4-4.

Section 1921.6.2.1 specifies a minimum reinforcement ratio of 0.0025 for both vertical and horizontal reinforcement of shear walls. For the proposed layout, at the center portion of the wall's length:

$$\rho_v = A_s / bs = 1.58\,\text{in.}^2 / (9'' \times 20'') = 0.0056 > 0.0025 \qquad o.k.$$

3. Moment strength of wall.

As recommended in the SEAOC Blue Book Commentary (§C407.5.5) the vertical reinforcement in the web of the wall and axial load contributions to the moment strength of wall sections should not be neglected.

The 1991 and earlier editions of the UBC required wall boundaries to carry all moment and gravity forces. This practice results in higher moment strengths in walls, which can lead to poor earthquake performance because it makes shear failure more likely to occur. This design practice is no longer accepted by the code.

Wall moment strength can be computed by hand calculations, spreadsheet calculations, or a computer program such as PCACOL. All three calculation approaches are demonstrated below. All of the calculation methods are based on an assumed strain distribution and an iterative calculation procedure.

3a. Assumed reinforcement strain.

As indicated in the SEAOC Blue Book Commentary (§C407.4.4), for cyclic loading all vertical reinforcement along the wall can be assumed to yield in either tension or compression. This assumption simplifies the hand calculation of moment capacity and is used in the hand calculations shown below.

Alternatively the reinforcement strain can be assumed to be directly proportional to distance from the neutral axis, as discussed in §1910.2. This assumption is used in the spreadsheet calculations demonstrated here and is also used by the PCACOL computer program.

The assumption of all reinforcement yielding results in a slightly greater moment strength compared to the strain assumption of §1910.2, but the difference is not significant. The two possible assumed strain distributions are illustrated in Figure 4-5 below. The assumption of all reinforcement yielding is typically closer to the actual strain distribution in a wall section under cyclic displacements than is the strain assumption of §1910.2, which is derived from monotonic loading.

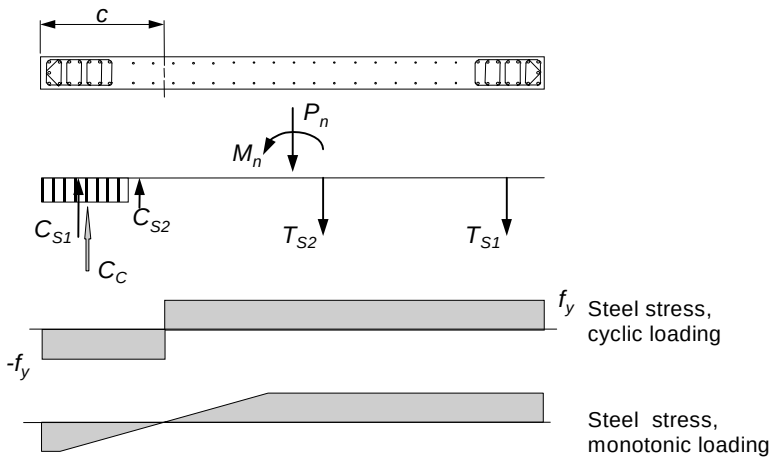

Figure 4-5. Steel stress and neutral axis depth

In calculating moment strength, it is necessary to determine the neutral axis depth, c, as shown in Figure 4-5. A typical calculation of moment strength is based on the following steps:

1. An initial estimate of c. $c = 0.15l_w$ can be used as an initial estimate.

2. Calculation of the steel reinforcement tension and compression forces.

3. Balancing the forces to calculate the concrete compressive force, $C_c = (P_n + \Sigma T_s - \Sigma C_s)$.

4. Calculation of the stress block length a, which corresponds to C_c.

5. Calculation of c equal to a/β_1, and a reiteration of Steps 1 through 4 if necessary.

3b. **Hand calculation.**

The calculation of moment strength is based on the free-body diagram shown in Figure 4-6.

The force reduction factor, ϕ, is calculated as a function of axial load according to §1909.3.2.2, as follows.

$$0.10 f'_c A_g = 0.10(5.0\text{ksi})(20'')(366'') = 3{,}660\text{ kips}$$

$$P_u = 1{,}560\text{ kips (see Part 1)}$$

$$\phi = 0.9 - 0.2(1{,}560/3{,}660) = 0.815$$

$$P_n = P_u/\phi = 1{,}560/0.815 = 1{,}910\text{ kips}$$

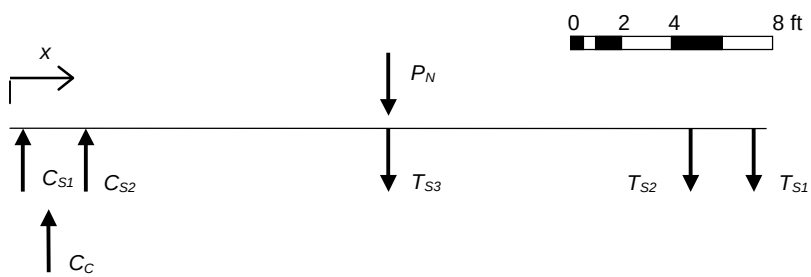

Figure 4-6. Free body diagram for moment strength

The iterative calculation of neutral axis depth and moment strength is shown in Tables 4-2 and 4-3 below. §1909.2

Table 4-2. First iteration for c *and* M_n

Force	*Reinforcement Bars*	A_s *in.*^{2}	$A_s f_y$ *kips*	x *in.*	$A_s f_y$*x *kip-in.*
C_{S1}	3-#11	4.68	-281	3	-842
C_{S2}	12-#11	18.7	-1122	34.5	-38,700
T_{S3}	54-#8	42.7	2562	183	469,000
T_{S2}	12-#11	18.7	1122	332	373,000
T_{S1}	3-#11	4.68	281	363	102,000
P_n			1910	183	350,000
C_c			-4472	26.3	-126,000
			0		1,130,000 =M_n (kip-in.)

Table 4-3. Second iteration for c *and* M_n

Force	*Reinforcement Bars*	A_s *in.*^{2}	$A_s f_y$ *kips*	x *in.*	$A_s f_y$*x *kip-in.*
C_{S1}	3-#11	4.68	-281	3	-842
C_{S2}	12-#11	18.7	-1122	34.5	-38,709
T_{S3}	52-#8	41.1	2465	187	460,918
T_{S2}	12-#11	18.7	1122	332	372,504
T_{S1}	3-#11	4.68	281	363	101,930
P_n			1910	183	349,530
C_c			-4375	25.7	-123,369
			0		1,121,961=M_n (kip-in.) 93,497=M_n (kip-ft)

First iteration, assume *c* = 60 in.

Therefore, 15-#11 bars yield in compression, 54-#8 bars (all web vertical bars) plus 15-#11 bars yield in tension. (Assume all reinforcement yields in either tension or compression.)

Solve for C_c to balance forces, $C_c = 4{,}470\,\text{kips}$

Calculate a corresponding to C_c, $a = C_c / (.85 f'_c b)$ $\quad a = 52.6$

Calculate $c = a/\beta_1 = 52.6/0.80$ $\quad c = 65.8$

Second iteration, assume *c* = 65 in.

Therefore, 15-#11 bars yield in compression, 52-#8 bars plus 15-#11 bars yield in tension. Neglect force in 2-#8 located at *x* = 67 inches. Therefore, centroid of 52-#8 bars is at *x* = 187 in. Assume all other reinforcement yields.

Solve for C_c to balance forces, $C_c = 4{,}375\,\text{kips}$

Calculate a corresponding to C_c, $a = C_c / (.85 f'_c b)$ $\quad a = 51.5$

Calculate $c = a/\beta_1$ $\quad c = 64.3$ $\quad$ *solution converged*

This results in $M_n = 93{,}500\,\text{k - ft}$

$$\phi M_n = 0.815(93{,}500\,\text{k - ft}) = 77{,}200\,\text{k - ft} > M_u\,75{,}500\,\text{k - ft} \qquad o.k.$$

3c. Calculation using a general spreadsheet.

The approach used above to calculate flexural strength can be done on a spreadsheet or by hand. A more generally applicable spreadsheet to calculate wall flexural strength can also be created. Such a spreadsheet is shown in Figure 4-7.

This spreadsheet is set up so that each individual layer of reinforcement is represented by a spreadsheet row. The input variables are at the top of the spreadsheet. The user adjusts the input value of the neutral axis depth, c, on the spreadsheet until the tension and compression forces on the section are balanced, as indicated by the added notes on the section.

The spreadsheet gives a design moment capacity, ϕM_n, of the selected section equal to 76,150 k-ft, nearly identical to that calculated by hand in the previous section.

3d. Calculation by PCACOL.

The computer program PCACOL can also be used to design wall sections for flexure and axial load. The example wall section was run on PCACOL and the moment strength obtained was the same as that calculated by the hand and spreadsheet methods. The printed screen output of the PCACOL run is shown in Figure 4-8.

#11 and #8

Strain Compatibility for Shear Walls Job: Wall Example 5 Date: Jul-97
Limiting Concrete Strain Job No. 8.23 By: JRM
Rectangular Stress Block (ultimate) Wall: 30.5' long rectangular wall

f'c =	5 ksi		
fy =	60 ksi		
l =	366 inches	length Pu = 0.9DL + 1.1E	
b =	20 inches	thickness	protection password: shw
Ag =	7320 inches	ρtotal= 0.0122	
x =	60 inches	Compression Zone Boundary Element Length	
y =	20 inches	Compression Zone Boundary Element Width	
cg =	183.0 inches from extreme compression fiber		
Pu =	1560.0 kips		
strain =	0.003 Ultimate concrete strain		
c =	67.6 inches		
n =	7.2		
beta1 =	0.80		

Layer	y (in)	strain (- is compr)	c(ksi)or fs(ksi)	As(in^2	Ts(kips	Cc (kips) Cs(kips	Moment	Calculation
compressi on zone	67.6	-0.00300	5.0			4596.8		716917
As1	363	0.01311	60.0	4.68	280.8	0.0	50544	0
As2	354	0.01271	60.0	3.12	187.2	0.0	32011	0
As3	345	0.01231	60.0	3.12	187.2	0.0	30326	0
As4	336	0.01191	60.0	3.12	187.2	0.0	28642	0
As5	327	0.01151	60.0	3.12	187.2	0.0	26957	0
As6	318	0.01111	60.0	3.12	187.2	0.0	25272	0
As7	309	0.01071	60.0	3.12	187.2	0.0	23587	0
As8	300	0.01031	60.0	1.58	94.8	0.0	11092	0
As9	291	0.00991	60.0	1.58	94.8	0.0	10238	0
As10	282	0.00951	60.0	1.58	94.8	0.0	9385	0
As11	273	0.00912	60.0	1.58	94.8	0.0	8532	0
As12	264	0.00872	60.0	1.58	94.8	0.0	7679	0
As13	255	0.00832	60.0	1.58	94.8	0.0	6826	0
As14	246	0.00792	60.0	1.58	94.8	0.0	5972	0
As15	237	0.00752	60.0	1.58	94.8	0.0	5119	0
As16	228	0.00712	60.0	1.58	94.8	0.0	4266	0
As17	219	0.00672	60.0	1.58	94.8	0.0	3413	0
As18	210	0.00632	60.0	1.58	94.8	0.0	2560	0
As19	201	0.00592	60.0	1.58	94.8	0.0	1706	0
As20	192	0.00552	60.0	1.58	94.8	0.0	853	0
As21	183	0.00512	60.0	1.58	94.8	0.0	0	0
As22	174	0.00472	60.0	1.58	94.8	0.0	-853	0
As23	165	0.00432	60.0	1.58	94.8	0.0	-1706	0
As24	156	0.00392	60.0	1.58	94.8	0.0	-2560	0
As25	147	0.00352	60.0	1.58	94.8	0.0	-3413	0
As26	138	0.00312	60.0	1.58	94.8	0.0	-4266	0
As27	129	0.00272	60.0	1.58	94.8	0.0	-5119	0
As28	120	0.00233	60.0	1.58	94.8	0.0	-5972	0
As29	111	0.00193	55.9	1.58	88.3	0.0	-6354	0
As30	102	0.00153	44.3	1.58	70.0	0.0	-5666	0
As31	93	0.00113	32.7	1.58	51.6	0.0	-4648	0
As32	84	0.00073	21.1	1.58	33.3	0.0	-3301	0
As33	75	0.00033	9.5	1.58	15.0	0.0	-1625	0
As34	66	-0.00007	2.1	1.58	0.0	3.3	0	381
As35	57	-0.00047	13.6	3.12	0.0	42.6	0	5363
As36	48	-0.00087	25.2	3.12	0.0	65.4	0	8835
As37	39	-0.00127	36.8	3.12	0.0	101.6	0	14628
As38	30	-0.00167	48.4	3.12	0.0	137.7	0	21071
As39	21	-0.00207	60.0	3.12	0.0	173.9	0	28165
As40	12	-0.00247	60.0	3.12	0.0	173.9	0	29744
As41	3	-0.00287	60.0	4.68	0.0	260.9	0	46964
				89.5	3653	5556	249496	872066
				Pn =	1915			
					5568	5556		

Ag=	7320 inches^2			
phi=	0.815			
Mn =	1121562	in*kip	93463	ft*kips
phi * M	913797	in*kip	76150	ft*kips
phi * P	1560	kips		

Figure 4-7. General spreadsheet to calculate flexural strength

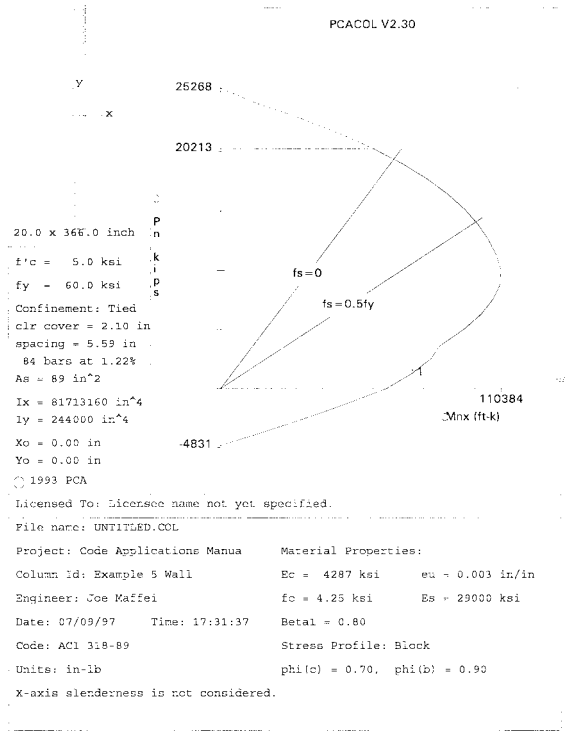

Figure 4-8. Analysis of wall section by PCACOL

4. Lap splices and curtailment of vertical bars.

4a. Bar cut-offs. §1912.10.3

Section 1912.10.3 addresses the development of flexural reinforcement and states "Reinforcement shall extend beyond the point at which it is no longer required to resist flexure for a distance equal to the effective depth of the member or $12d_b$, whichever is greater." For a wall, the effective depth may be considered equal to $0.8l_w$, according to §1911.10.4. Section 402.7 of the SEAOC Blue Book clarifies this requirement and recommends that the requirement be applied to concrete walls.

Applying the bar cut-off requirement to the example wall, the moment strength is reduced in two steps over the height of the wall: above Level 5 and above Level 7. The dimensions of the wall section and the number of vertical bars are unchanged at these transitions—only the size of the reinforcement is reduced. The selection of vertical reinforcement sizes and cut-offs is shown in the wall elevation of Figure 4-10. A summary of flexural reinforcement and moment strength over the wall height is given in Table 4-4, below.

Table 4-4. Boundary and vertical web reinforcement

Location	*Vertical Bars Each Boundary*	*Web Vertical Bars*	*Axial Load* P_u=0.9P_D	*Design Moment Strength,* ΦM_n
Level 1 – Level 5	15-#11	54-#8	1560 k	76,200 k-ft
Level 5 – Level 7	15-#10	54-#7	766 k	59,200 k-ft
Level 7 – Level 9	15-#8	54-#6	392 k	40,400 k-ft

The moment strengths for each reinforcement arrangement were calculated using the spreadsheet procedure described in Part 3c, above.

The moment strength above Level 5 is checked by the calculation below. For simplicity, the moment diagram is assumed to be linear over the building height. This also addresses higher mode effects according to the recommendations of Paulay and Priestley [1992].

Height of reinforcement cut-off above base	= 51'-0" + 3'-2" lap splice	= 54.2'
Height after subtracting $0.8l_w$ bar extension	= 54.2' – 0.8(30.5')	= 29.8'
Moment demand M_u at the base of the wall		= 75,500 k-ft
Overall wall height, h_w		= 95.3'
Moment demand at $h = 29.8'$ based on linear moment diagram	= (75,500)(95.3 – 29.8)/95.3	= 51,900 k-ft. < 59,200 *o.k.*

Similarly, the moment strength above Level 7 is checked by the following calculation:

Height of reinforcement cut-off above base	= 73'-2" + 2'-9" lap splice	= 75.9'
Height after subtracting $0.8l_w$ bar extension	= 75.9 – 0.8(30.5)	= 51.5'
Moment demand at $h = 51.5'$ based on linear moment diagram	= (75,500)(95.3 – 51.5)/95.3	= 34,700 k-ft. < 40,400 *o.k.*

The calculations for bar cut-off locations are illustrated in Figure 4-9.

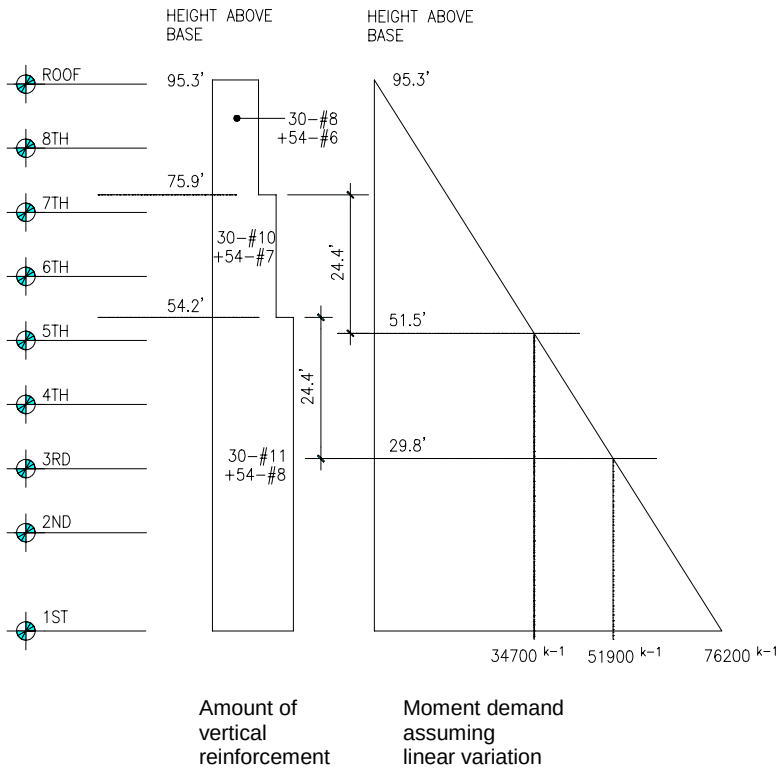

Figure 4-9. Calculation of required moment strength at bar cut-off locations

4b. Splices of reinforcement.

The lap splices of the vertical reinforcement are shown in the wall elevation of Figure 4-11. Lap splice lengths are taken from the CRSI rebar detailing chart [CRSI, 1996]. Lap splices are not used over the first two stories of the wall, because this is the anticipated plastic hinge region.

Although not specifically required by the code, lap splices of flexural reinforcement should be avoided in plastic hinge regions of walls. As indicated in 1999 Blue Book Sections C402.7 and C404.3 (and in the commentary to Section 21.3.2 of ACI 318 [1999], applicable to flexural members of frames), lap splices in plastic hinge regions are likely to slip unless they are surrounded by confining ties. Even well-confined lap splices (§C402.7) that do not slip are undesirable in plastic-hinge regions because they prevent an even distribution of yielding along the length of the flexural reinforcement.

Paulay and Priestley [1992] note that splices in plastic hinge zones tend to progressively unzip and that attempting to mitigate the problem by making lap splices longer than required is unlikely to ensure satisfactory performance.

Welded splices or mechanical couplers. **§1921.2.6**

Properly designed welded splices or mechanical connection splices are preferable to lap splices in plastic hinge regions. Ideally, the welded or mechanical splices should be able to develop the breaking strength of the bar. As a minimum, mechanical splices must be Type 2 splices according to §1921.2.6. If used in plastic hinge regions, SEAOC recommends that welded or mechanical splices be staggered so that no more than one-half of the reinforcement is spliced at one section, and the stagger is not less than 2 feet. Staggering of the splices is not required by the UBC.

Plastic hinge length and zone in which to exclude lap splices. **§1921.6.6.5**

Section 1921.6.6.5 specifies that the equivalent plastic hinge length, l_p, of a wall section "shall be established on the basis of substantiated test data or may be alternatively taken as $0.5l_w$." Based on the work of Paulay and Priestley [1993] and FEMA-306 [1999], l_p for walls can be taken as $0.2l_w + 0.07M/V$, where M/V is the moment to shear ratio at the plastic hinge location.

For the example wall, l_p is calculated by both methods as shown below:

$l_p = 0.5l_w$ = 0.5(30.5')

= 15.2'

$l_p = 0.2l_w + 0.07M/V$ = 0.2(30.5') + 0.07(68,600 k-ft / 1340 k) = 6.1' + 3.6'

= 9.7'

For this Design Example, we will take 9.7 ft as l_p, based on the substantiated test data reviewed by Paulay and Priestley [1993].

Equivalent plastic hinge lengths, as calculated above, are used to relate plastic curvatures to plastic rotations and displacements (for example in §1921.6.6.5). The actual zone of yielding and nonlinear behavior typically extends beyond the *equivalent* plastic hinge length. For flexural members of frames, §1921.3.2.3 indicates that flexural yielding may be possible "within a distance of twice the member depth from the face of the joint." This distance is conservatively defined to be larger, by a factor of two or more, than the equivalent plastic hinge length, l_p.

Thus, for this Design Example wall, the expected zone of yielding should be taken as equal to at least $2l_p$ (19.4 ft), and lap splices should be avoided over this height.

In the Design Example, lap splices are excluded over the first two stories, i.e., over a height of 28.8 ft, as shown in the wall elevation of Figure 4-10. Because of potential construction difficulties in using continuous vertical bars from the

foundation through Level 3, an option to use welded or mechanical connection splices can be specified as shown in Figure 4-10. Such splices require an ICBO Evaluation Report or acceptance by the local building official.

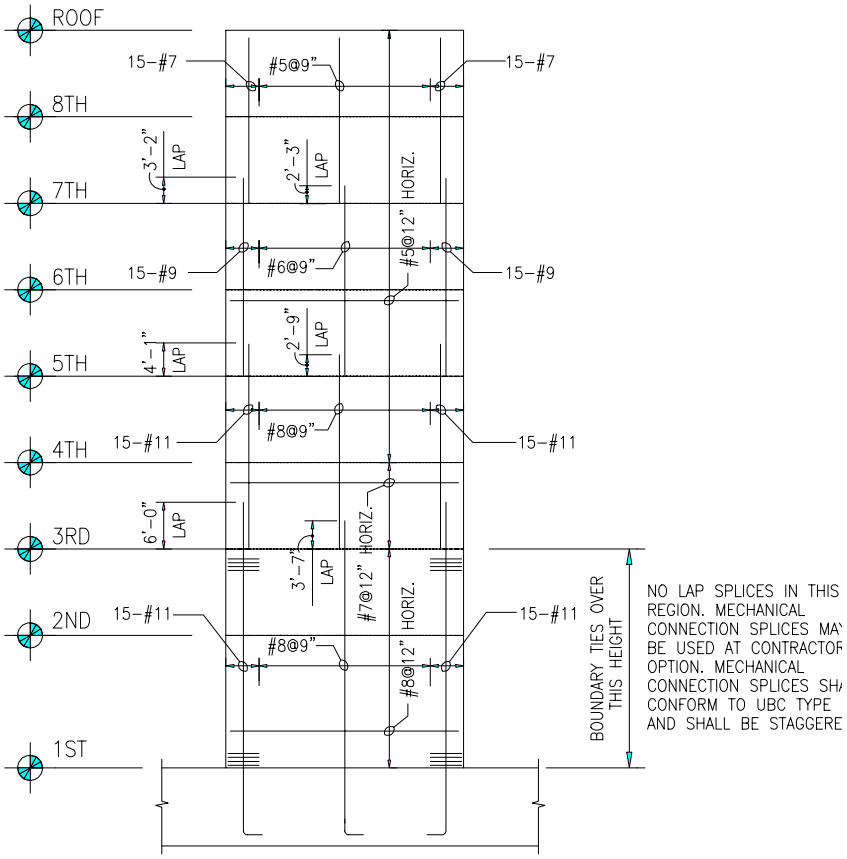

Figure 4-10. Wall elevation

5. Design for shear.

The SEAOC Blue Book Section 402.8.1 requires that "the design shear strength ϕV_n shall not be less than the shear associated with the development of the nominal moment strength of the wall." A design for shear forces based on code requirements will not necessarily achieve this objective. Thus, the code provisions covered in Part 5(a) should be considered as *minimum* requirements for the shear design of walls.

Designing for amplified shear forces as recommended in the Blue Book is covered in Part 5(b) below.

5a. UBC requirements.

Shear demand.

If designing to the minimum requirements of the UBC, the shear demand is taken directly from the design forces, factored by the load combinations discussed in Part 1 of this Design Example. At the base of the wall:

$$V_u = V_E = 1{,}470\,\text{k}$$

Shear capacity.

Section 1911.10 gives shear provisions for walls designed for *nonseismic* lateral forces such as wind or earth pressure. Section 1921.6.5 gives shear strength provisions for walls designed for *seismic* forces.

Since the subject wall has a ratio of h_w/l_w greater than 2.0, Equation (21-6) governs wall shear strength:

$$V_n = A_{cv}\left(2\sqrt{f'_c} + \rho_n f_y\right)$$

As prescribed in §1909.3.4.1, the shear strength reduction factor, ϕ, shall be 0.6 for the design of walls if their nominal shear strength is less than the shear corresponding to development of their nominal flexural strength.

$$\phi V_n = 0.6(20'')(366'')\left[2 + \rho_n(60{,}000\,\text{psi})\right] = 621\text{k} + 263{,}000\,\rho_n$$

At each level, the amount of horizontal reinforcement provided for shear strength is given in Table 4-5. Note that for all levels above Level 2, the minimum reinforcement ratio of 0.0025 governs the amount of horizontal reinforcement. (§1921.6.2.1)

Table 4-5. Horizontal reinforcement for UBC shear strength requirements

Level	V_E kips	Horizontal Reinforcement	ρ_n	ϕV_n kips
R	95	#5@12" E.F.	0.00258	1300
8	262	#5@12" E.F.	0.00258	1300
7	438	#5@12" E.F.	0.00258	1300
6	625	#5@12" E.F.	0.00258	1300
5	821	#5@12" E.F.	0.00258	1300
4	1030	#5@12" E.F.	0.00258	1300
3	1260	#5@12" E.F.	0.00258	1300
2	1470	#6@12" E.F.	0.00367	1585

UBC §1921.6.5.6 requires that V_n shall not be taken greater than $8A_{cv}\sqrt{f'_c}$.

$$8A_{cv}\sqrt{f'_c} = 8\,(20'')(366'')\sqrt{5{,}000} = 4{,}140\,\text{kips} > 1{,}585\,\text{kips} \qquad o.k.$$

5b. **Blue Book recommendations.**

Shear demand.

To comply with the Blue Book requirement of providing shear strength in excess of the shear corresponding to wall flexural strength, an amplified shear demand is considered.

Section C402.8 of the Blue Book commentary gives the following equation for the shear amplification factor, ω_v , that accounts for inelastic dynamic effects. For application to designs according to the UBC, the amplification factor recommended by Paulay and Priestley [1992] can be reduced by a factor of 0.85, because the Paulay and Priestley recommendations use a different strength reduction factor, ϕ , than does the UBC.

ω_v = 0.85(1.3 + n/30), for buildings over 6 stories, where n = number of stories

ω_v = 0.85(1.3 + 8/30) = 1.33

As indicated in the Blue Book, the ω_v factor is derived for analysis using inverted triangular distributions of lateral forces. If a response spectrum analysis is carried out, a slightly lower ω_v factor can be justified in some cases.

For this Design Example, the shear demand is taken at the nominal strength. For further conservatism, one could base the shear demand on the upper bound of flexural strength, which can be taken as the "probable flexural strength," M_{pr}, defined in §1921.0.

M_n is calculated using a strength reduction factor, ϕ , of 1.0, and taking the upper bound of axial load from the load combinations of UBC §1921.0. The probable and nominal moment strengths for the higher axial load are as shown in Table 4-6. The nominal moment strength previously calculated is shown for comparison.

Table 4-6. Moment strength comparison

Quantity	*Axial Load Considered*	*Reinforcement Strength*	*Moment Strength*
Probable strength	$P_u = 1.44P_D + P_L$ =2820 k	1.25 f_y = 75 ksi	M_{pr} = 125,000 k-ft
Nominal strength	$P_u = 1.44P_D + P_L$ =2820 k	f_y = 60 ksi	M_{pr} = 111,000 k-ft
Nominal strength	$P_u = 0.9P_D$ =1560 k	f_y = 60 ksi	M_n = 93,500 k-ft

At the base of the wall, the magnified shear demand V_u* is calculated as follows:

$$V_u{*} = \omega_v (M_n / M_u)(V_E) = 1.33(111{,}000\,\text{k} - \text{ft} / 75{,}500\,\text{k} - \text{ft})(1{,}470\,\text{k}) = 2{,}870\,\text{k}$$

Shear capacity.

Since this Design Example uses nominal shear strength to exceed the shear corresponding to flexural strength, a strength reduction factor, ϕ, of 0.85 can be used. As before, Equation (21-6) is used to calculated shear capacity:

$$\phi V_n = 0.85\,(20'')(366'')\left[2 + \sqrt{5{,}000} + \rho_n (60{,}000\,\text{psi})\right] = 880\,\text{k} + 373{,}000\rho_n \qquad \S 1921.6.5$$

For the shear demand of 2870 k, the required amount of horizontal reinforcement is calculated:

$$\rho_n = (2{,}870\,\text{k} - 880\,\text{k}) / 373{,}000 = 0.00535$$

Try #8 @ 12" o.c. each face

$$\rho_n = 2\,(0.79\,\text{in.}^2) / (12'' \times 20'') = 0.00658 > 0.00535 \qquad o.k.$$

This amount of shear reinforcement is provided over the bottom two stories of the wall. For the other stories, the recommended amount of horizontal reinforcement, based on the magnified shear demand V_u*, is calculated as shown in Table 4-7.

Table 4-7. Horizontal reinforcement based on Blue Book shear design recommendations

Level	V_E (k)	V_u* (k)	Horizontal Reinforcement	ρ_n	ϕV_n (k)
R	95	186	#5@12" E.F.	0.00258	1841
8	262	512	#5@12" E.F.	0.00258	1841
7	438	856	#5@12" E.F.	0.00258	1841
6	625	1220	#5@12" E.F.	0.00258	1841
5	821	1610	#5@12" E.F.	0.00258	1841
4	1030	2010	#7@12" E.F.	0.00500	2742
3	1260	2460	#8@12" E.F.	0.00658	3331
2	1470	2870	#8@12" E.F.	0.00658	3331

Paulay and Priestley [1992] recommend equations for shear strength that are somewhat different than Equation (21-6), and in which the shear strength at plastic hinge zones is taken to be less than that at other wall locations. For the wall design in this Design Example, the Paulay and Priestley shear strength equations result in nearly identical amounts of horizontal reinforcement as does Equation (21-6).

5c. **Discussion of UBC and Blue Book results for shear reinforcement.** **Blue Book §C407.2.5**

A comparison of Tables 4-6 and 4-7 shows that the Blue Book recommendation (§C407.2.5) of providing shear strength that exceeds flexural strength results in more horizontal reinforcement in the bottom three stories of the wall than that required by the code. The Blue Book approach is recommended by SEAOC, as it leads to more ductile wall behavior.

In the upper five stories of the wall, the code minimum amount of horizontal steel $(\rho_n = 0.0025)$ is adequate to meet both the UBC requirements and the Blue Book recommendations. Overall, the additional cost of heavier bars in the first three stories, as determined under the Blue Book requirements, should not be significant.

The wall elevation of Figure 4-10 shows the horizontal reinforcement per the Blue Book recommendation.

6. **Sliding shear (shear friction).** **§1911.7**

At construction joints and flexural plastic hinge zones, walls can be vulnerable to sliding shear. Typically lowrise walls are more vulnerable. If construction joint surfaces are properly prepared according to §1911.7.9, taller walls should not be susceptible to sliding shear failure.

Sliding shear can be checked using the shear friction provisions of §1911.7. Shear strength is computed by Equation (11-25):

$$V_n = A_{vf} f_y \mu$$

μ is the coefficient of friction, which is taken as 1.0λ, where $\lambda = 1.0$ for normal weight concrete.

A_{vf} is the amount of shear-transfer reinforcement that crosses the potential sliding plane. For the wall in this Design Example, all vertical bars in the section are effective as shear-transfer reinforcement [ACI-318 Commentary §R11.7.7]. At the base of the wall:

$$A_{vf} = 30(1.56\,\text{in.}^2) + 54(0.79\,\text{in.}^2) = 89.5\,\text{in.}^2$$

Section 1911.7.7 indicates that "permanent net compression" can be taken as additive to the force $A_{vf}\, f_y$, thus the lower bound axial load, $0.9P_D$, can be included in Equation (11-25):

$$V_n = \left(A_{vf}\, f_y + 0.9P_D\right)\mu$$

$$= \left[\left(89.5\,\text{in.}^2\right)\left(60\,\text{ksi}\right) + 1{,}560\,\text{k}\right]\left(1.0\right) = 6{,}930\,\text{k}$$

Section 1911.7.5 requires that the shear friction strength not be taken greater than $0.2\,f'_c$ or 800 psi times the concrete area. For the example wall with $f'_c = 5{,}000\,\text{psi}$, the 800 psi criterion governs:

$$V_n \le \left(800\,\text{psi}\right)\left(20'' \times 366''\right) = 5{,}860\,\text{k} > V_u{}^* = 2{,}870\,\text{k} \qquad o.k.$$

By inspection, the sliding shear capacity at higher story levels of the building is also okay.

7. Boundary zone detailing.

The code gives two alternatives for determining whether or not boundary zone detailing needs to be provided: a simplified procedure, §1921.6.6.4, and a strain calculation procedure, §1921.6.6.5.

7a. UBC simplified procedure. §1921.6.6.4

Under §1921.6.6.4, boundary zone detailing need not be provided if:

$$P_u \le 0.10A_g\, f'_c \qquad (P_u \le 0.05A_g\, f'_c \text{ for nonsymmetrical wall sections})$$

and either:

$$M_u / \left(V_u l_w\right) \le 1.0$$

or:

$$V_u \le 3A_{cv}\sqrt{f'_c}$$

Use of this procedure for the wall in this Design Example is shown below:

$$P_u = 1.44P_D + P_L = 2{,}820\,\text{k}$$

$$0.10A_g f'_c = 0.10(20'' \times 366'')(5.0\,\text{ksi}) = 3{,}660\,\text{k} > 2{,}820\,\text{k}$$

$$M_u/(V_u l_w) = 75{,}000\,\text{k}-\text{ft}/[(1{,}470\,\text{k})(30.5')] = 1.68 > 1.0$$

$$3A_{cv}\sqrt{f'_c} = 3(20'' \times 366'')\sqrt{5{,}000\,\text{psi}} = 1{,}550{,}000\# = 1{,}550\,\text{k} > V_u = 1{,}470\,\text{k}$$

Therefore, boundary zone detailing as defined in §1921.6.6.6 is not required.

7b. UBC strain calculation procedure. §1921.6.6.5

Section 1921.6.6.5 requires the calculation of total curvature, ϕ_t, at the plastic hinge region of the wall. The procedure applies only when the plastic hinge is located at the base of the wall, which is the case for the example wall. Total curvature is calculated by the following equation:

$$\phi_t = \frac{\Delta_i}{(h_w - l_p/2)l_p} \qquad \text{§1630.9.2}$$

where $\Delta_i = \Delta_t - \Delta_y$

and $\Delta_t = \Delta_m$, when the analysis has used effective stiffness (cracked section) properties

Δ_m is defined in Equation (30-17) of §1630.9.2 as

$$\Delta_m = 0.7R\Delta_s$$

Δ_s is the design level response displacement. For the example wall at the top, it is the displacement $\Delta_s = 2.32$ inches, taken from the analysis.

$$\Delta_m = 0.7R\Delta_s = 0.7(4.5)(2.32'') = 7.32''$$

Δ_y is the yield displacement of the wall, taken as $(M'_n/M_E)\Delta_E$. For the example wall, Δ_E, the displacement corresponding to M_E, is equal to $\Delta_s (= 2.32'')$, the displacement taken from the analysis.

Calculation of M'_n requires a re-calculation of the moment strength at the base of the wall, this time using the axial load $P'_u = 1.2P_D + 0.5P_L$. The results of the calculation, including the neutral axis depth, are shown in Table 4-8, below.

Table 4-8. Summary of M'_n calculation

Quantity	Axial Load Considered	Reinforcement Strength	Moment Strength	Neutral Axis Depth
M'_n	$P'_u = 1.2P_D + 0.5P_L$ = 2240 k	f_y = 60 ksi	M'_n = 103,000 k-ft	c'_u = 78.0"

$$\Delta_y = \left(M'_n / M_E\right)\Delta_E = \left(103{,}000\,\text{k}-\text{ft}/75{,}500\,\text{k}-\text{ft}\right)\left(2.32''\right) = 2.54''$$

$$\Delta_i = \Delta_t - \Delta_y = 7.31'' - 2.54'' = 4.15''$$

The height of the wall, h_w, equals 95.3 ft (1140 in.), and the plastic hinge length, l_p will be taken as $0.5l_w$ (183 in). The yield curvature ϕ_y, can be estimated as $0.003/l_w$. Substituting these values into Equation (21-9):

$$\phi_t = \frac{4.15''}{\left(1{,}140'' - 183''/2\right)183''} + 0.003/366'' = 29.8(10)^{-6}\,\text{in.}^{-1}$$

The compressive strain at the extreme fiber of the section equals the total curvature times the neutral axis depth:

$$\varepsilon_c = \phi_t c'_u = \left(29.8(10)^{-6}\,\text{in.}^{-1}\right)\left(78''\right) = 0.00233 < 0.003$$

$\therefore$ Boundary confinement not required.

Note that assuming a smaller plastic hinge length, $l_p = 9.7\,\text{ft} = 116''$, as defined in Part 4b above, results in a strain of 0.00321, which would require that boundary confinement be provided.

7c. Blue Book recommendations. Blue Book §402.11.1

Section 402.11 of the Blue Book modifies the UBC, including a revised formula for Δ_t that gives a more realistic estimate of inelastic seismic displacements and corrects a tendency for the UBC strain calculation procedure to give unconservative results. Section 402.11.1 of the 1999 Blue Book replaces the definition of Δ_t to give:

$$\Delta_t = R\Delta_s$$

For the example wall in this Design Example, this gives:

$$\Delta_t = R\Delta_s = 4.5(2.32'') = 10.4''$$

$$\Delta_i = \Delta_t - \Delta_y = 10.4'' - 3.17'' = 7.28''$$

Plugging this value of Δ_i into Equation 21-9 gives:

$$\phi_t = \frac{7.28''}{(1{,}140'' - 183''/2)183''} + 0.003/366'' = 46.1(10)^{-6}$$

The compressive strain at the extreme fiber of the section equals the product of the total curvature and the neutral axis depth:

$$\varepsilon_c = \phi_t c'_u = \left(46.1(10)^{-6}\text{in.}^{-1}\right)(78'') = 0.00360 > 0.003$$

$\therefore$ Boundary confinement *is* required.

Assuming a smaller plastic hinge length, $l_p = 9.7\,\text{ft} = 116\,\text{in.}$, as defined in Part 4b above, results in a strain of 0.00515, further indicating the prudence of adding boundary confinement to the subject wall.

Section 402.12 of the SEAOC Blue Book requires that all wall edges in potential plastic hinge regions have ties spaced at $6d_b$ or 6 inches maximum, to restrain the buckling of bars. For the wall in this Design Example, #4 tie sets at 6 inches on center, with a tie leg located at each of the #11 bars, as shown in Figure 4-11, and on the wall elevation of Figure 4-10, should be provided as a minimum.

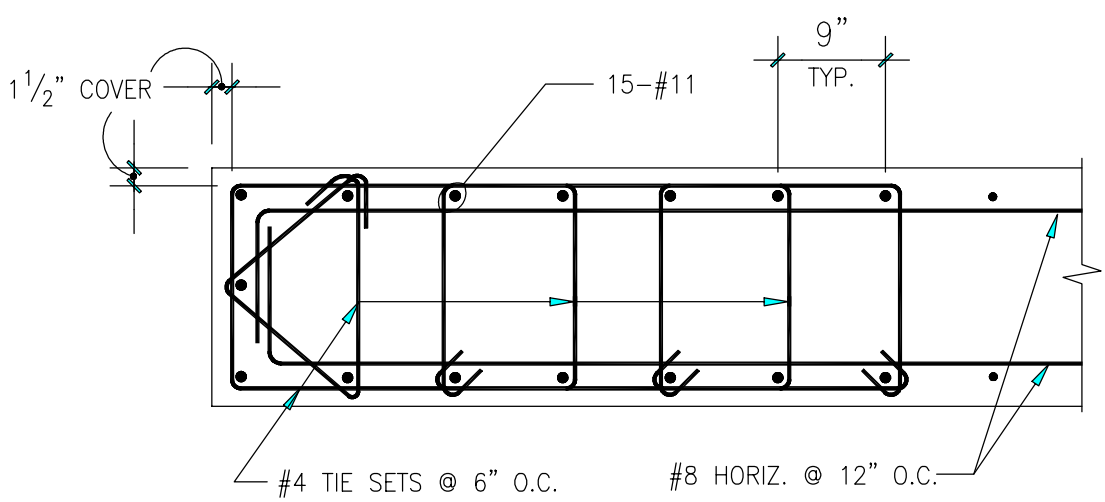

Figure 4-11. Boundary reinforcement at wall base

References

ATC-43, 1999. *Evaluation of Earthquake Damaged Concrete and Masonry Wall Buildings*, prepared by the Applied Technology Council (ATC-43 project) for the Partnership for Response and Recovery. Federal Emergency Management Agency, Report No. FEMA-306, Washington, D.C.

CRSI, 1996. *Rebar Design and Detailing Data – ACI*. Concrete Reinforcing Steel Institute, Schaumberg, Illinois.

Maffei, Joe, 1996. "Reinforced Concrete Structural Walls — Beyond the Code," *SEAONC Fall Seminar Proceedings*. Structural Engineers Association of Northern California, San Francisco, California, November.

Paulay, T., and M.J.N. Priestley, 1992. *Reinforced Concrete and Masonry Buildings, Design for Seismic Resistance*. John Wiley & Sons, Inc., New York. (Chapter 5 covers seismic behavior and design of reinforced concrete walls, including examples. The book is not based on the ACI or UBC codes, but explains the principles that underlie several code provisions.)

Paulay, T., and M.J.N. Priestley, 1993. *Stability of Ductile Structural Walls*. ACI Structural Journal, Vol. 90, No. 4, July-August 1993.

PCA, 1999. "*PCACOL: Design and Investigation of Reinforced Concrete Column Sections*," Portland Cement Association, Skokie, Illinois.

Design Example 5
Reinforced Concrete Wall with Coupling Beams

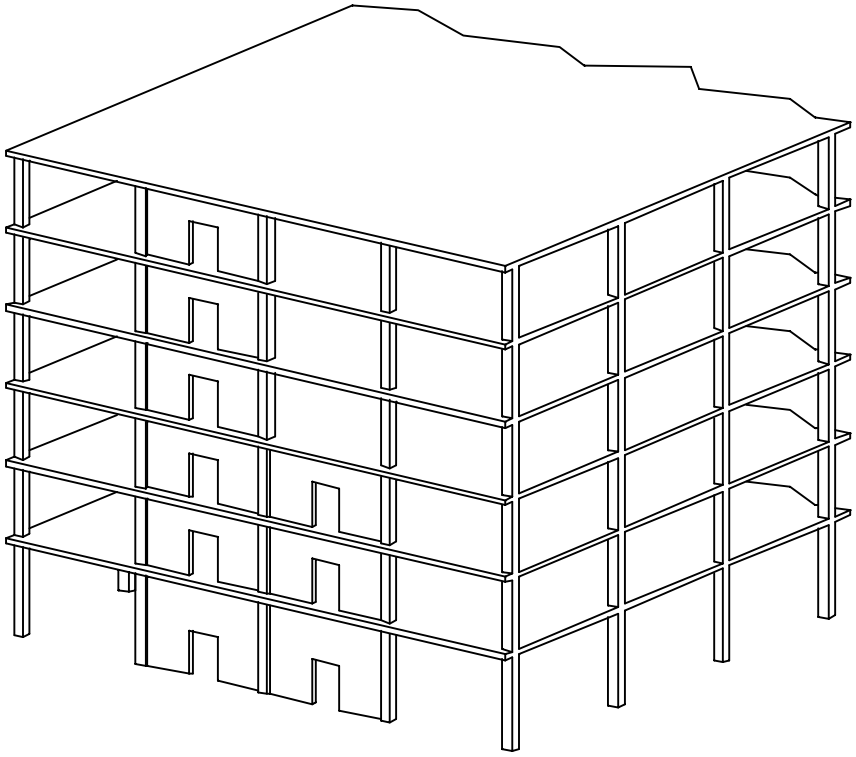

Figure 5-1. Six-story concrete office building (partial view)

Overview

The structure in this Design Example is a 6-story office building with reinforced concrete walls (shear walls) as its lateral force resisting system. The example focuses on the design and detailing of one of the reinforced concrete walls. This is a coupled wall running in the transverse building direction and is shown in Figure 5-1. The example assumes that design lateral forces have already been determined for the building, and that the seismic moments, shears, and axial loads on each of the wall components, from the computer analysis, are given.

The purpose of this Design Example is to illustrate the design of coupling beams and other aspects of reinforced concrete walls that have openings. Research on the behavior of coupling beams for concrete walls has been carried out in New Zealand, the United States, and elsewhere since the late 1960s. The code provisions of the UBC derive from this research.

Outline

This Design Example illustrates the following parts of the design process:

1. **Load combinations for design.**
2. **Preliminary sizing of shear wall.**
3. **Coupling beam design.**
4. **Design of wall piers for flexure.**
5. **Plastic analysis of flexural mechanism in walls.**
6. **Design of wall piers for shear.**
7. **Boundary zone detailing of wall piers.**
8. **Detailing of coupling beams.**

Given Information

The following information is given:

Seismic zone = 4
Soil profile type = S_D
Near-field = 5 km from seismic source type A
Redundancy/reliability factor, ρ = 1.0
Importance factor, I = 1.0
Concrete strength, f'_c = 4000 psi
Steel yield strength, f_y = 60 ksi

The wall to be designed, designated Wall 3, is one of several shear walls in the building. The wall elevation, a plan section, and the design forces are shown in Figure 5-2. An elastic analysis of the wall for lateral forces, using a computer program, gives the results shown in Figure 5-3, which shows the moments and shear for each coupling beam (i.e., wall spandrel), and the moments, shear and axial forces for each vertical wall segment (i.e., wall pier).

Lateral story displacements, corresponding to gross section properties, are also shown on the figure. Where displacements are used in design they should correspond to effective section properties rather than gross section properties, as indicated in §1633.2.4. Typical practice is to use a percentage of the gross stiffness, e.g., 50 percent, for the effective stiffness. In such a case, the displacements from the gross section model can be uniformly factored up. The displacements for a linear elastic model using 50 percent of I_g will be two times the displacements using the gross section properties. In this Design Example, the displacement output is not used. In an actual building design, the displacements would need to be considered for: 1.) design of elements not part of the lateral-force-resisting system, 2.) building separations, 3.) boundary design by the strain calculation procedure, and 4.) $P\Delta$ analysis. Other recommendations for member stiffness assumptions are given in Section 5.3 of Paulay and Priestley [1992].

Gravity loads are not included in the computer model. Gravity effects are added separately by hand calculations.

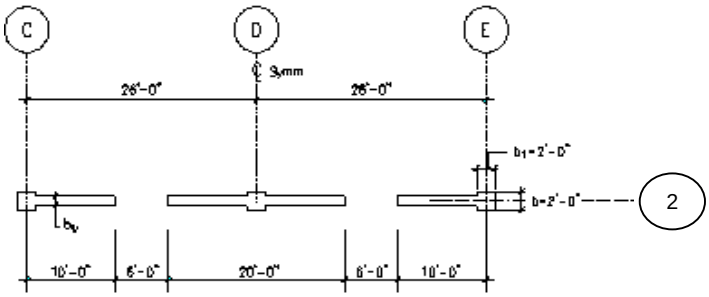

Plan

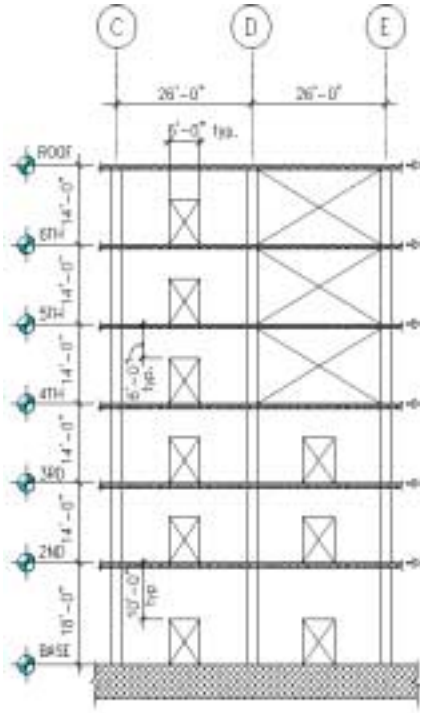

LATERAL FORCES F_a	GRAVITY LOADS EACH COLUMN	
	P_D	P_L
337#	133	10
319#	281	25
259#	428	44
198#	576	63
138#	742	82
78#	874	100

P_D = EXCLUDE WALL WEIGHT

Elevation

Figure 5-2. Wall elevation, plan section, and design forces of Wall 3

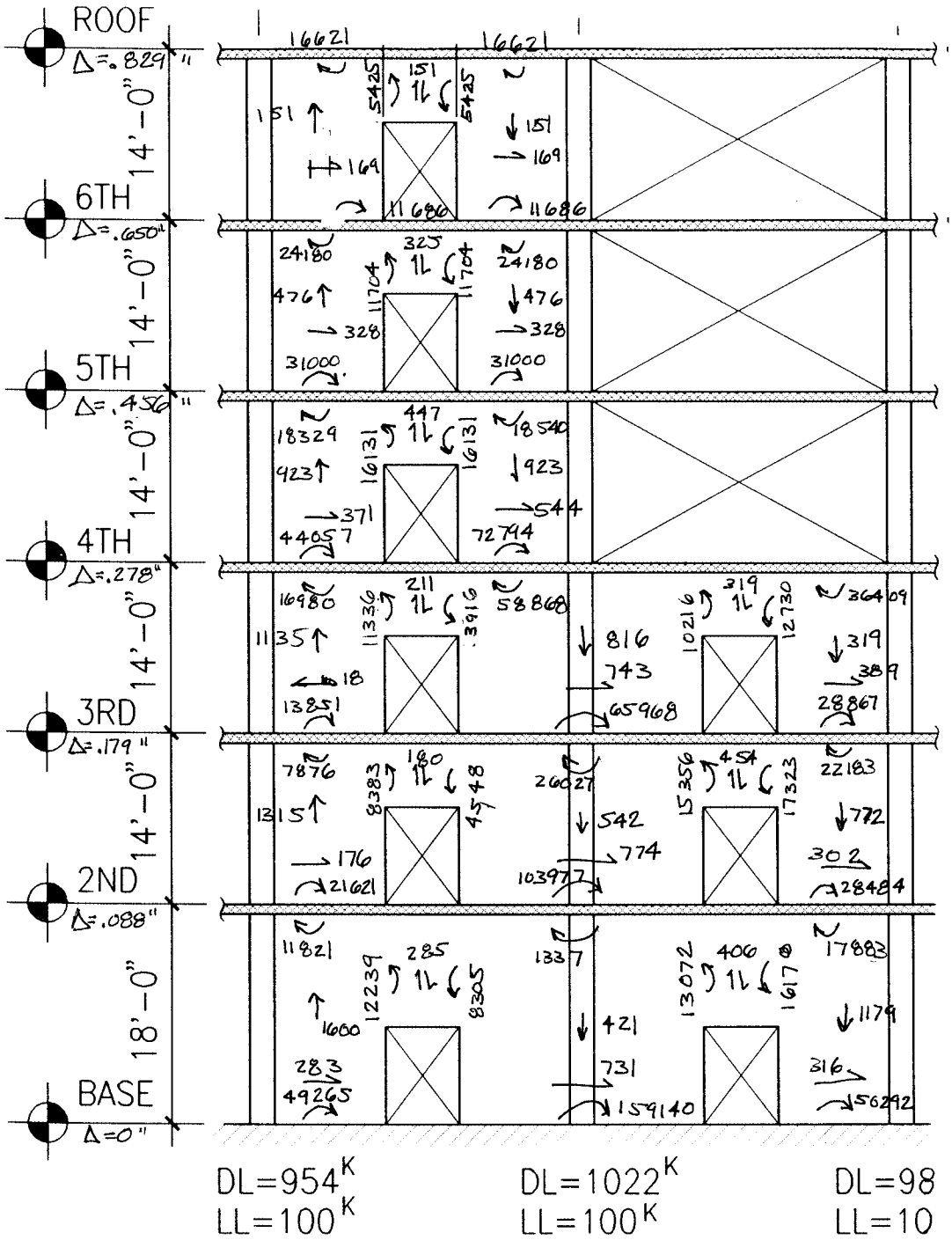

Units:
P=kips beam moment at edge of wall piers
V=kips pier moments at floor levels
M=kips-inch

Figure 5-3. Results of ETABS computer analysis for Wall 3

Calculations and Discussion	Code Reference

1. Load combinations for design.

Load combinations for reinforced concrete are discussed in detail in Part 1 of Design Example 4. As in that example, we assume here that the presiding building department has indicated approval of the SEAOC recommended revisions to the UBC load combinations. Thus the governing load combinations become:

$$(1.2 \pm 0.5C_a I)D \pm \rho E_h + (f_1 L + f_2 S)$$ Blue Book §101.7.2.1

$$0.9D \pm \rho E_h$$ Blue Book §C403.11

Since the given structure is an office building, $f_1 = 0.5$. And since there is no snow load, $S = 0$.

The same seismic zone, soil profile, near-field, redundancy, and importance factors are assumed as for Design Example 4, thus $C_a = 0.484$. With $I = 1.0$ and $\rho = 1.0$, the governing load combinations for this Design Example are:

$$0.9D \pm E_h$$

$$[1.2 \pm 0.5(0.484)]D \pm E_h + L \quad \begin{cases} = 1.44D \pm E_h + 0.5L \\ = 0.958D \pm E_h + 0.5L \quad \textit{does not govern} \end{cases}$$

The forces shown in Figure 5-3 correspond to E_h.

2. Preliminary sizing of shear wall.

For walls with diagonally reinforced coupling beams, the required wall thickness is often dictated by the layering of the reinforcement in the coupling beam. Typically, a wall thickness of 15 inches or larger is required for diagonally reinforced coupling beams conforming to the 1997 UBC.

For the subject wall, a wall thickness, b_w, of 16 inches will be tried.

3. Coupling beam design.

3a. Requirement for diagonal reinforcement.

Code requirements for the diagonal reinforcement of coupling beams (§1921.6.10.2) are based on the clear-length to depth ratio for the coupling beam, l_n/d , and on the level of shear stress in the coupling beam.

For the wall in this Design Example, it will be assumed that *d* equals 0.8 times the overall depth, so that $l_n/d = 72''/(0.8\times 72'') = 1.25$ for the typical coupling beam, and $l_n/d = 72''/(0.8\times 120'') = 0.75$ for the coupling beams at the second floor.

As shown in Table 5-1 (6th column), for five of the nine coupling beams the shear exceeds $4\sqrt{f'_c}b_w d$. For these coupling beams, diagonal reinforcement is required.

For the four coupling beams that have lower shear stress, diagonal reinforcement is not required by the UBC. Designing these 4 coupling beams without diagonal reinforcement, using horizontal reinforcement to resist flexure and vertical stirrups to resist shear, might lead to cost savings in the labor to place the reinforcing steel.

In this Design Example, however, diagonal reinforcement is used in all of the coupling beams of the wall because: 1.) it can simplify design and construction to have all coupling beams detailed similarly, and 2.) research results show that diagonal reinforcement improves coupling beam performance, even at lower shear stress levels, as discussed in §C407.7 of the SEAOC Blue Book.

Table 5-1. Coupling beam forces and diagonal reinforcement

Grid Line	Level	V_u (kips)	h (in.)	d (in.)	$V_u/b_w d\sqrt{f'_c}$ (1)	Diagonal Bars	A_d (in.^{2})	α (degrees)	ϕV_n (kips)	$\phi V_n/V_u$
C-D	Roof	151	72	57.6	2.6	4-#8	3.16	37.9	198	1.31
C-D	6th	325	72	57.6	5.6	4-#10	5.08	37.9	318	0.98
C-D	5th	447	72	57.6	7.7	6-#10	7.62	36.0	456	1.02
C-D	4th	211	72	57.6	3.6	4-#9	4.00	37.9	251	1.19
C-D	3rd	180	72	57.6	3.1	4-#9	4.00	37.9	251	1.39
C-D	2nd	285	120	96.0	2.9	4-#9	4.00	53.1	326	1.14
D-E	4th	319	72	57.6	5.5	6-#9	6.00	36.0	359	1.13
D-E	3rd	454	72	57.6	7.8	6-#10	7.62	36.0	456	1.00
D-E	2nd	406	120	96.0	4.2	4-#10	5.08	53.1	414	1.02

Note: Diagonal bars are required when this ratio exceeds 4.

3b. **Design of diagonal reinforcement.**

Diagonal reinforcement is provided in the coupling beams according to Equation (21-1) of §1921.6.10.2:

$$\phi V_n = 2\phi f_y \sin\alpha A_{vd} \tag{21-1}$$

Each group of diagonal bars must consist of at least 4 bars (§1921.6.10.2). The calculation of the required diagonal reinforcement is shown in Table 5-1. For coupling beams with higher shear stresses, 6 bars are needed in each group, as shown in Table 5-1.

The angle α of the diagonal bars is calculated based on the geometry of the reinforcement layout, as shown in Figure 5-4. The value of α depends somewhat on overall dimension of the diagonal bar group and on the clearance between the diagonal bar group and the corner of the wall opening. This affects the dimension x shown in Figure 5-4 and results in a slightly different value of α for a group of 6 bars compared to that for a group of 4 bars, as shown in Table 5-1.

The provided diagonal bars are shown in Figure 5-5.

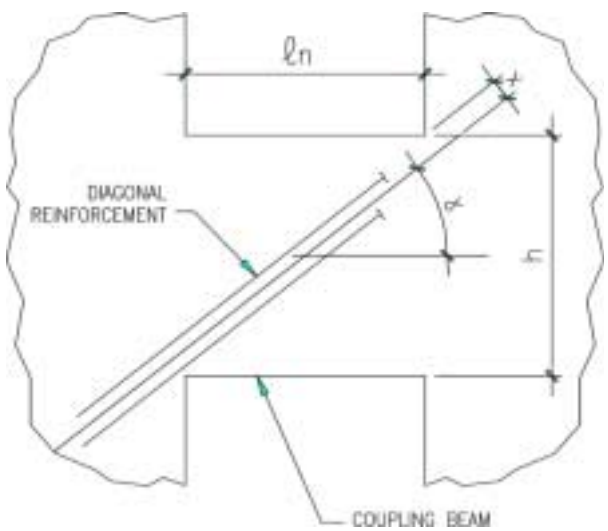

Figure 5-4. Geometry of coupling beam diagonal bars

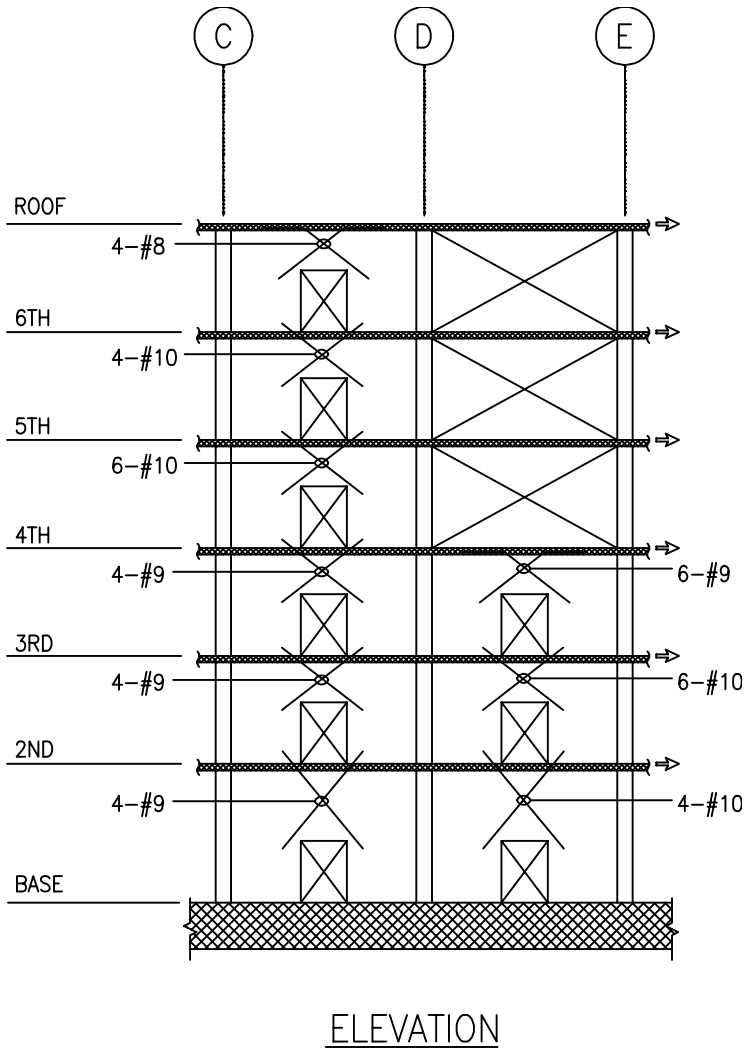

Figure 5-5. Diagonal bars provided in coupling beams

4. Design of wall piers for flexure.

The design of the vertical wall segments for flexure is carried out following the procedures and recommendations given for conventional "solid" walls. This is shown in Part 3 of Design Example 4. From Figure 5-3, the critical wall segments (i.e., those with the highest moments or earthquake axial forces) include the wall pier at the 4th floor on Line D, and the wall piers at the base on Lines C and E. The 20-foot long wall pier on Line D at the base is also checked.

4a. Critical moments and axial forces.

As can be seen from Figure 5-2, the gravity loads on each wall pier are not concentric with the wall pier centroid. Therefore, gravity load moments must be considered in the design of flexural reinforcement. The dead and live loads (except wall self-weight shown in Table 5-2) in Figure 5-2 act at the column grid lines, and have an eccentricity, e_{DF}, with respect to the section centroid, as given in Table 5-3 (**Note:** The calculation of weights, section centroids, e_{DF}, *and* e_{DW} is not shown). The wall self-weight provides additional dead load at each level, equal to the values given in Table 5-2.

Table 5-2. Dead load from wall self-weight

	Line C		Line D		Line E	
Level	Sum of Wall Weight (kips)	Eccentricity, e_{DW} (ft) (1)	Sum of Wall Weight (kips)	Eccentricity, e_{DW} (ft) (1)	Sum of Wall Weight (kips)	Eccentricity, e_{DW} (ft) (1)
Above 6th	26	2.06	26	-2.06	0	
Above 5th	53	2.06	53	-2.06	0	
Above 4th	79	2.06	79	-2.06	0	
Above 3rd	106	2.06	132	-3.71	26	-2.06
Above 2nd	132	2.06	185	-2.65	53	-2.06
At base	166	2.03	252	-1.94	86	-2.00

Note:
1. e_{DW} = distance between centroid of weight and centroid of wall section.

The calculation of the factored forces on the critical wall piers is shown in Table 5-3. In this table, gravity moments are calculated about the section centroid, using the gravity loads acting at the column centerline, P_{DF} and P_L, plus the dead load from wall self-weight, P_{DW}. Earthquake moments, M_E, are taken from Figure 5-3.

Loads are factored according to the combinations discussed in Part 1 of this Design Example, giving two cases for each wall pier: minimum axial load and maximum axial load. The minimum axial load case is based on the combination of E_h with $0.9D$, and the maximum axial load case is based on the combination of E_h with $1.44D + 0.5L$.

Considering that larger axial compression generally increases moment strength, potentially governing combinations are shown as shaded areas in Table 5-3.

Table 5-3. Calculation of factored axial forces and moments on critical wall piers

Level	Line	P_{DF} (kips)	e_{DR} (ft)	P_{DW} (kips)	e_{DW} (ft)	P_L (kips)	Direction of force	P_E (kips)	M_E (k-ft)	M_D (k-ft)	M_L (k-ft)	Minimum Axial		Maximum Axial	
												P_U	M_U	P_U	M_U
4th	D	428	-4.13	79	-2.06	44	west	-923	-6,070	1,603	182	-467	-4,628	-171	-3,671
4th	D	428	-4.13	79	-2.06	44	east	923	6,070	1,603	182	1,379	7,512	1,675	8,469
1st	C	874	4.13	166	2.03	100	west	1,600	-4,105	-3,268	-413	2,536	-7,047	3,148	-9,018
1st	C	874	4.13	166	2.03	100	east	-1,600	4,105	-3,268	-413	-664	1,164	-52	-807
1st	E	874	-4.13	86	-2.00	100	west	-1,179	-4,191	3,433	413	-315	-1,101	253	959
1st	E	874	-4.13	86	-2.00	100	east	1,179	4,191	3,433	413	2,043	7,281	2,611	9,341
1st	D	874	0	252	-1.94	100	west	-421	-13,250	-489	0	592	-13,690	1,250	-13,954

Notes:

P_{DF} = dead load distributed over floor area, which acts at the column line.

e_{DF} = distance between P_{DF} and centroid of wall section.

P_{DW} = dead load from wall self-weight.

e_{DW} = distance between P_{DW} and centroid of wall section.

4b. Vertical reinforcement.

The program PCACOL [PCA, 1999] is used to design the reinforcement in each wall pier. Figure 5-6 shows a wall section with the typical layout of vertical reinforcement. Typical reinforcement in the "column" portion of the wall piers is 8-#9 and typical vertical reinforcement in the wall web is #7@12. The PCACOL results of Figure 5-7a, 5-7b, and 5-7c show that this reinforcement is adequate in all locations except Line D at the 4th floor where 8-#10 are required instead of 8-#9. Figure 5-7d shows that the typical reinforcement provides adequate moment strength to the 20-foot long wall pier on Line D.

Figure 5-8 shows the vertical reinforcement provided in the wall piers to satisfy moment strength requirements. Note that the vertical reinforcement in the column portion of the 4th floor piers is increased to 8-#11 (from 8-#9 used at the lower levels), and that at the 5th and 6th floors is increased to 8-#10. The reasons for this will be discussed in Part 5 of this Design Example.

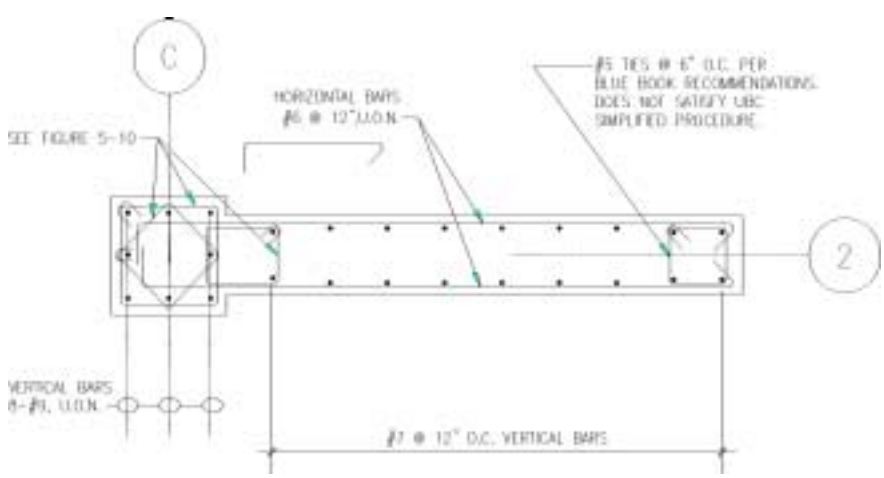

Figure 5-6. Section through wall pier in vicinity of Line C

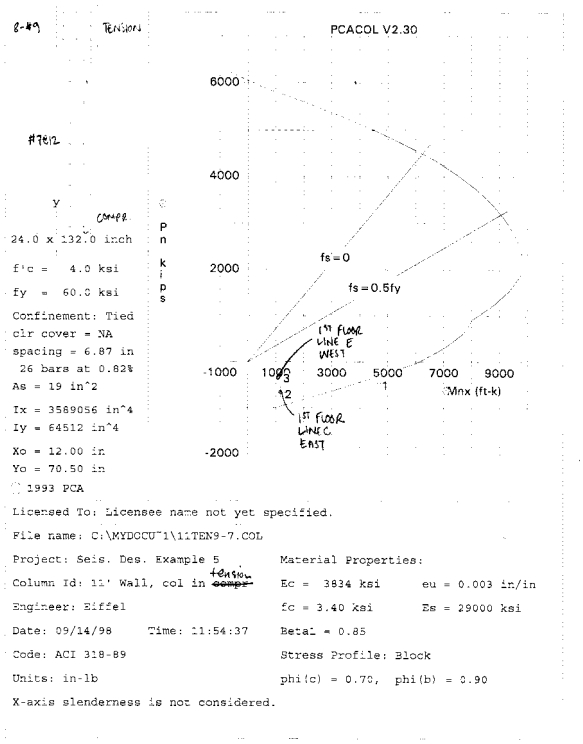

a.

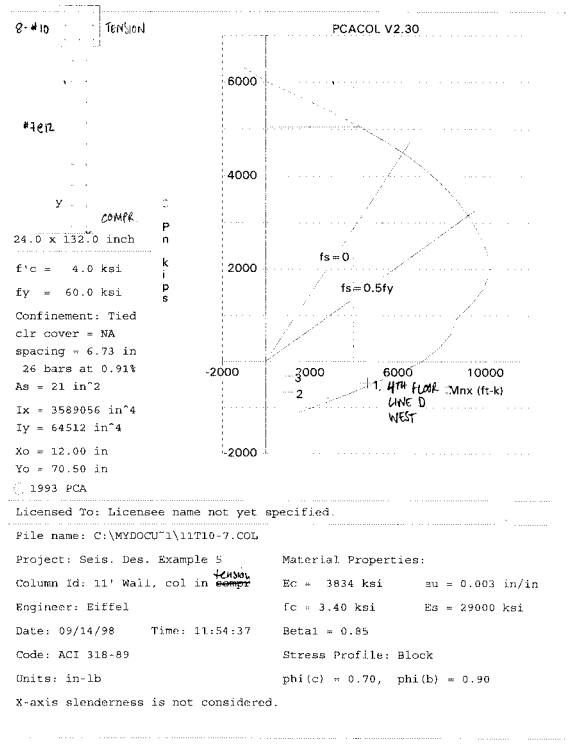

b.

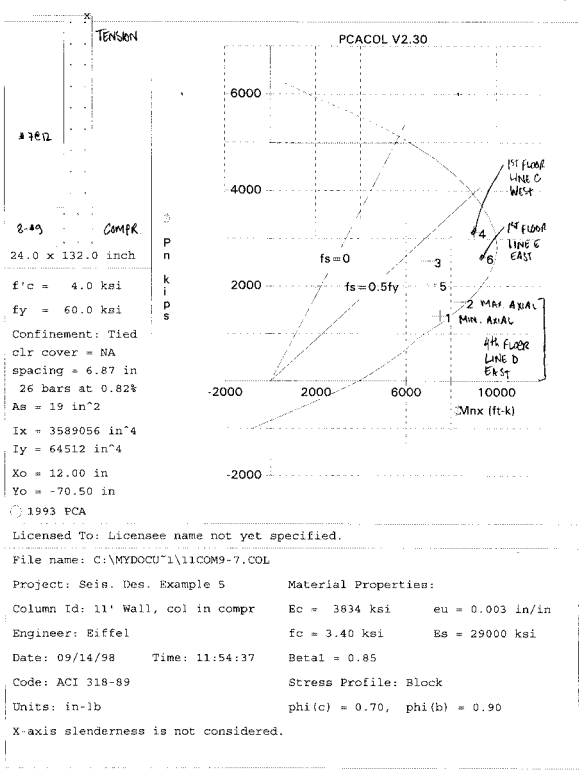

c.

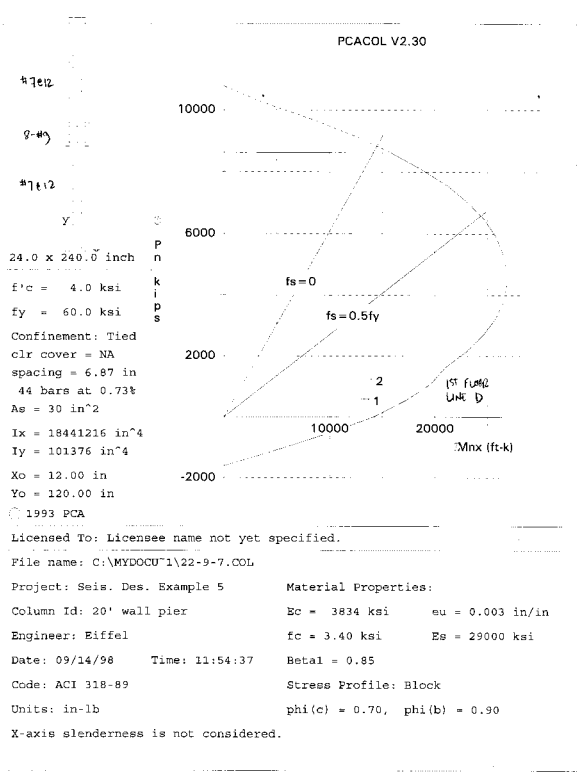

d.

Figure 5-7. PCACOL results for design of vertical reinforcement

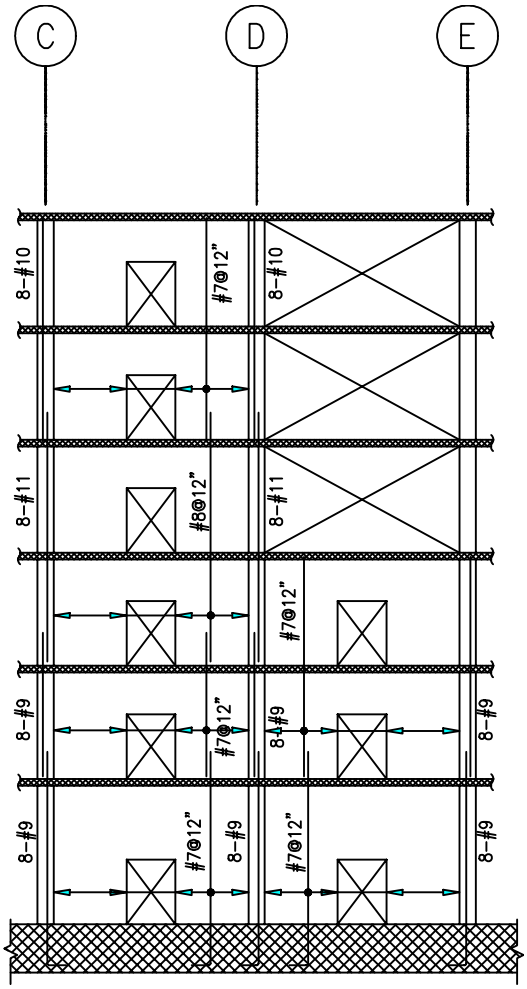

Figure 5-8. Elevation of vertical wall reinforcement

4c. Lap splice locations.

In general, lap splices should be avoided in potential plastic hinge regions of concrete structures. This is discussed in Part 4b of Design Example 4 and in Blue Book §C404.3. For this example wall, plastic hinging is expected (and desired) at the base of each wall pier and in the coupling beams. Plastic hinging may also be possible above the wall setback, in the 4th floor wall piers. (This will be investigated in more detail in Part 5 of this Design Example.)

Lap splices of the vertical wall reinforcement are located to avoid the potential plastic hinge regions in first floor and fourth floor wall piers, as shown in Figures 5-10 and 5-11 and in Tables 5-5 and 5-6 in Part 5B, below.

5. Plastic analysis of flexural mechanism in walls. Blue Book §C402.8, C407.5.5.2

This part of the Design Example presents a plastic analysis methodology that is not a code requirement. It is included to assist the reader in understanding the post-elastic behavior of coupled shear walls and how they can be analyzed for seismic forces when elements of the wall are yielding.

Plastic analyses are not required by the UBC, but they are recommended in the SEAOC Blue Book: 1.) to establish shear demand corresponding to flexural strength, and 2.) to identify potential plastic hinge regions where special boundary and splicing requirements may be necessary. With the trend toward nonlinear static analysis (pushover) procedures, as called for in performance-based structural engineering guidelines [FEMA-273, 1997 and ATC-40, 1996], the ability to use plastic analyses will become increasingly important. The first three chapters of the textbook *Plastic Design in Steel* [ASCE, 1971] summarize the basic principles and methods of plastic design, and these are recommended reading for the interested reader.

Given below is an illustration of plastic analysis for the reinforced concrete walls and coupling beams of this Design Example.

5a. Probable moment strength.

The "probable flexural strength," M_{pr}, will be determined in calculating shear demands, according to the Blue Book recommendations. As defined in §1921.0, M_{pr} is calculated assuming a tensile stress in the longitudinal bars of $1.25\,f_y$, and a strength reduction factor, ϕ, of 1.0. For the purposes of this plastic analysis, we will neglect earthquake axial forces E_v in calculating M_{pr} for each wall pier and assume an axial load of $1.2P_D + 0.5P_L$. In reality, the wall pier with earthquake axial tension will have a decreased moment strength, while the wall pier with earthquake axial compression will have an increased moment strength. These effects tend to cancel out so that our plastic analysis will give a good estimate of 1.) the governing mechanism of response, and 2.) the shear corresponding to the development of a mechanism at probable flexural strength. Table 5-4 shows M_{pr} values for the critical wall piers, based on the PCACOL results shown in Figure 5-9.

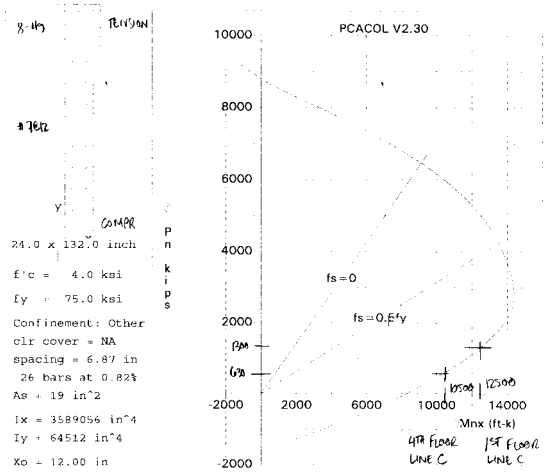

a.

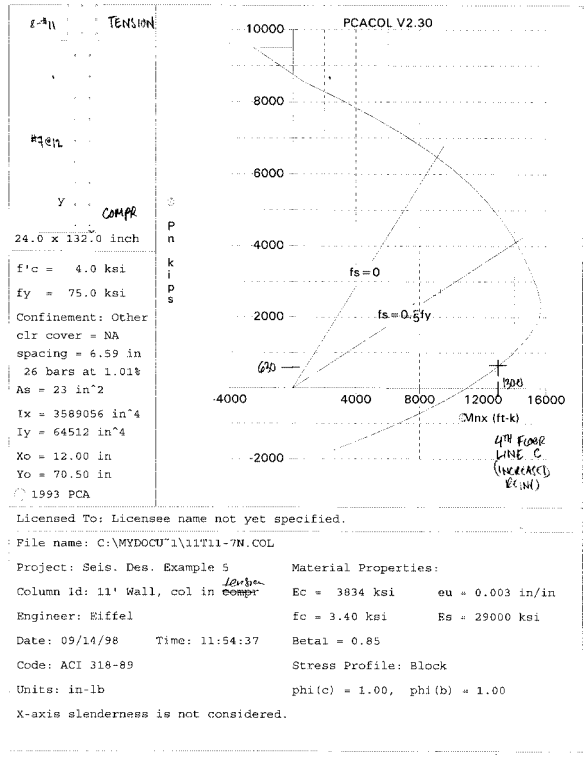

b.

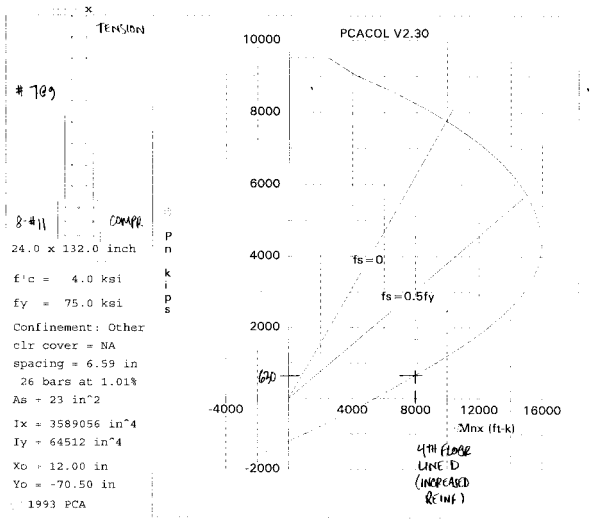

c.

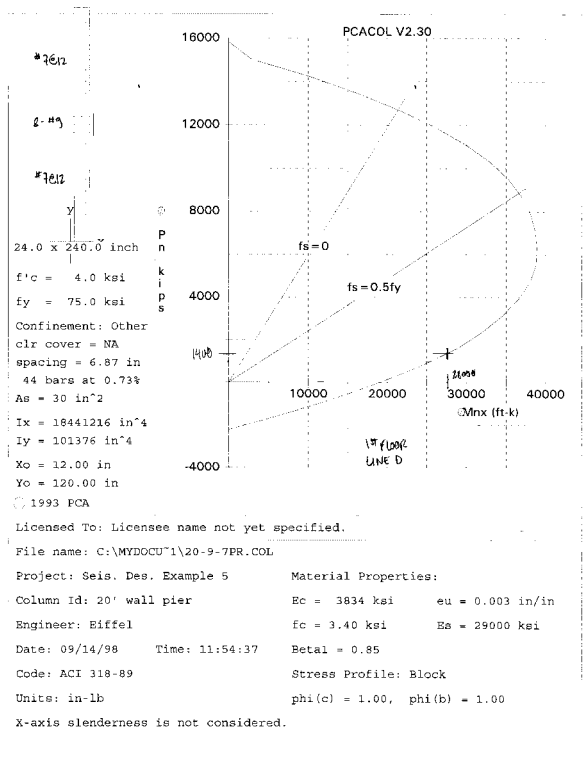

d.

Figure 5-9. PCACOL calculation of probable moment strength $M_{pr}\left(f_y = 75\text{ksi}, \phi = 1.0\right)$

Table 5-4. Approximate probable moment strengths of wall piers for plastic analysis

Level	Grid Line	Reinforcement of Column Portion	Axial Load Considered $1.2P_D + 0.5P_L$ (kips)	M_{pr} (k-ft)
4th	C	8-#9	630	10,500
4th	D	8-#10	630	7,500
1st	C	8-#9	1,300	12,500
1st	D	8-#9	1,400	28,000
1st	E	8-#9	1,200	10,000
4th	C	8-#11	630	13,000
4th	D	8-#11	630	8,000

5b. Mechanism with plastic hinging at the base.

The preferred behavior of the wall occurs when plastic hinges occur at the base of the wall piers and in the coupling beams. This produces the desirable situation of flexural yielding, energy dissipation, and avoidance of shear failures.

Table 5-5 shows calculations of the shear strength of the preferred plastic mechanism, which has plastic hinges forming at the base of each wall pier and in each coupling beam. The equivalent plastic hinge length at the pier base, l_p, is taken equal to 5 feet.

The plastic hinge length is used in the calculation of external work shown in Table 5-5. The calculation is not sensitive to the value of l_p assumed, since $l_p/2$ is subtracted from h_i, the height above the base. In this case, the value of 5 feet is taken as one-half the wall length of the external wall piers. Although the central pier is longer, it is assigned the same plastic hinge length. Note that in the strain calculation procedure for wall boundary design, the value used for l_p has a significant effect on the results. This is discussed in Part 7 of Design Example 4.

Plastic lateral story displacements, Δ_i, increase linearly with height above the midpoint of the base plastic hinges. Δ_i is arbitrarily set equal to 1.00 feet at the roof. The external work equals the sum of each lateral story force, f_{xi}, times Δ_i.

The plastic rotation angle of the wall piers, θ, equals the roof displacement divided by the roof height above the midpoint of the plastic hinge. Thus, $\theta = 1.00/85.5$. The plastic rotation angle and internal work of the coupling beams can be calculated as follows:

$$\theta_{cb} = \theta \frac{l_c}{l_n}$$

where:

l_n = clear length of the coupling beam

l_c = distance between centroids of wall pier sections

Internal work $= \Sigma(\theta_{cb} \times M_{pr})$ for each end of each coupling beam

$= \Sigma(\theta_{cb} \times 1.25 V_n l_n / 2)$

$= \Sigma(\theta \times 1.25 V_n l_c / 2)$

$= \Sigma(\theta \times 1.25 V_n l_c)$ for each coupling beam (sum of 2 ends)

The internal work of the base plastic hinges equals the sum of M_{pr} times θ for each of the three base plastic hinges. The summation of the internal work is shown in Table 5-5. Equating internal work with external work gives the solution of $V = 2{,}420$ kips.

Table 5-5. Plastic mechanism calculations assuming plastic hinging at base and in all coupling beams [1]

External Work					
Level	h_i *(ft)*	$h_i - l_p/2$ *(ft)*	Δ_i *(ft)*	$\frac{f_{xi}}{V}$	*Work /V (ft)*
R	88	85.5	1.000	0.254	0.254
6th	74	71.5	0.836	0.240	0.201
5th	60	57.5	0.673	0.195	0.131
4th	46	43.5	0.509	0.149	0.076
3rd	32	29.5	0.345	0.104	0.036
2nd	18	15.5	0.181	0.058	0.011
Sum				1.000	0.708
Internal Work, Coupling Beams					
Grid Line	*Level*	$1.25V_n$ *(k)*	l_c *(ft)*	*Work (k-ft)*	
C-D	R	291	21.5	73	
C-D	6th	468	21.5	118	
C-D	5th	671	21.5	169	
C-D	4th	368	21.5	93	
C-D	3rd	368	21.5	93	
C-D	2nd	480	21.5	121	
D-E	4th	528	21.5	133	
D-E	3rd	671	21.5	169	
D-E	2nd	609	21.5	153	
				1,120	
Internal Work, Wall Piers				θ = 1.00/85.5	
Grid Line	*Level*	M_{pr} *(k-ft)*		*Work (k-ft)*	
C	base	12500		146	
D	base	28000		327	
E	base	10000		117	
				591	
V= (1120 + 591)/0.708 = 2,420 kips					

Note:

1. See Figure 5-10 for illustration of hinge locations.

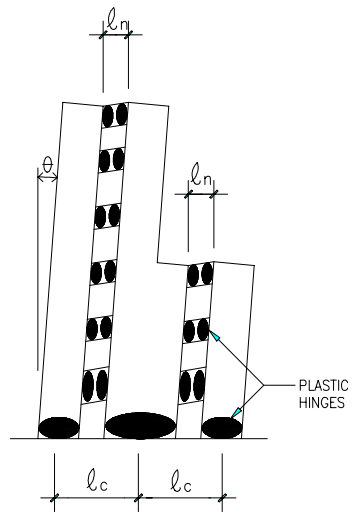

Figure 5-10. Mechanism with plastic hinges at base of wall

5c. Mechanism with plastic hinging at the 4th floor.

Table 5-6 shows calculations of the shear strength of another possible plastic mechanism, which has plastic hinges forming at the 4th floor wall piers and only in the coupling beams at the 5th, 6th, and roof levels. This plastic mechanism is less desirable than a mechanism with hinging at the base, because energy dissipation is concentrated in fewer yielding locations, and because plastic rotations in the wall piers would need to be much greater to achieve the same roof displacement.

As in the previous calculation, plastic lateral story displacements, Δ_i, increase linearly with height above the midpoint of the base plastic hinges, and Δ_i is set equal to 1.00 feet at the roof. For this mechanism, the plastic rotation angle of the wall piers, θ, equals 1.00/39.5. The plastic analysis solution, based on equating internal and external work, gives $V = 2{,}300\,\text{kips}$. Since this is less than 2,420 kips, the mechanism having plastic hinging at the 4th floor governs (i.e., is more likely to form than the preferred base mechanism shown in Figure 5-10).

To help prevent plastic hinging in the 4th floor piers, their flexural strength can be increased. Reinforcement of the column portions of these wall piers is increased to 8-#11. Table 5-6 shows revised internal work calculations. The solution gives $V = 2{,}460\,\text{kips}$. Since this is greater than 2420 kips, the preferred mechanism now governs.

Note that the calculation of the governing plastic limit load, V, depends on the assumed vertical distribution of lateral forces, which in actual seismic response can vary significantly from the inverted triangular pattern assumed. Thus the difference between $V = 2{,}420\,\text{kips}$ and 2,460 kips does not absolutely ensure against plastic hinging in the 4th floor wall piers.

Inelastic dynamic time-history analyses by computer generally show less predictability of yield locations than plastic analyses imply. For the wall of this Design Example, a time-history analysis might show some wall pier yielding both at the base and at the 4th floor. Interaction of the wall with other walls in the structure and with gravity framing can also influence the mechanism of yielding.

Plastic analyses are simpler to carry out and understand than most other analysis methods, particularly inelastic time-history analyses, and they offer valuable insight into the seismic performance of a structure. For this Design Example, the plastic analyses indicate that strengthening the 4th floor piers will protect the upper stories above the setback against high ductility demands, and make it more likely that the preferred mechanism will form.

Table 5-6. Plastic mechanism calculations assuming plastic hinging at 4th floor piers (1)

External Work					
Level	h_i *(ft)*	$h_i - l_p/2$ *(ft)*	Δ_i *(ft)*	$\frac{f_{xi}}{V}$	*Work / V (ft)*
R	42	39.5	1.000	0.254	0.254
6th	28	25.5	0.646	0.240	0.155
5th	14	11.5	0.291	0.195	0.057
4th			0.000	0.149	0.000
3rd			0.000	0.104	0.000
2nd			0.000	0.058	0.000
Sum				**1.000**	**0.466**
Internal Work, Coupling Beams					
Grid Line	*Level*	$1.25V_n$ *(k)*	l_c *(ft)*	*Work (k-ft)*	
C-D	R	291	17	125	
C-D	6th	468	17	201	
C-D	5th	671	17	289	
Sum				615	
Internal Work, Wall Piers				θ = 1.00/39.5	
Grid Line	*Level*	M_{pr} *(k-ft)*		*Work (k-ft)*	
C	4th	10500		266	
D	4th	7500		190	
Sum				456	
V= (615 + 456)/0.466 = 2,300 kips					

Note:

1. See Figure 5-11 for illustration of hinge locations.

Table 5-7. Plastic mechanism calculations assuming plastic hinging at 4th floor piers—revised for stronger piers at 4th floor

Internal Work, Wall Piers				*θ = 1.00/39.5*	
Grid Line	*Level*	*M_{pr} (k-ft)*		*Work (k-ft)*	
C	4th	13000		329	
D	4th	8000		203	
Sum				532	
V= (615 + 532)/0.466 = 2,460 kips					

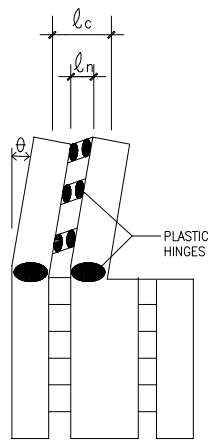

Figure 5-11. Mechanism with plastic hinges at 4th floor wall piers

6. Design of wall piers for shear.

In this part, the wall piers will be designed for shear. Both the UBC and Blue Book approaches will be illustrated. Design for the minimum UBC requirements is given in Part 6a below.

As discussed in Part 5 of Design Example 4, the SEAOC Blue Book contains more restrictive requirements than does the UBC for the shear design of reinforced concrete walls. The SEAOC approach, in Part 6b of this Design Example, is recommended for the reasons given in Design Example 4.

6a. Design under UBC requirements.

Shear demand.

If designing to the minimum requirements of the UBC, the shear demand is taken directly from the design forces, factored by the load combinations discussed in Part 1. For the example wall, all of the significant shear on the wall piers results from earthquake forces, thus $V_u = V_E$, where the values V_E are those shown in Figure 5-3. The highest shears are at the 4th floor, Line D, with $V_E = 544\,\text{kips}$ in an 11-foot-long wall pier (48.5 k/ft), and at the 1st floor, Line D, with $V_E = 731\,\text{kips}$ in a 20-foot long wall pier (36.6 k/ft).

Shear capacity. §1921.6.5

UBC §1911.10 gives shear provisions for walls designed for *nonseismic* lateral forces such as wind or earth pressure. Section 1921.6.5 gives shear strength provisions for walls designed for *seismic* forces.

In Equation (21-7), wall shear strength depends on α_c, which depends on the ratio h_w/l_w.

$$V_n = A_{cv}\left(\alpha_c\sqrt{f'_c} + \rho_n f_y\right) \tag{21-7}$$

Per §1921.6.5.4 the ratio h_w/l_w is taken as the larger of that for the individual wall pier and for the entire wall.

Overall wall	$h_w/l_w = 88'/54'$	= 1.63
11' long by 8' clear-height pier	$h_w/l_w = 8'/11'$	= 0.73
20' long by 8' clear-height pier	$h_w/l_w = 8'/20'$	= 0.40

Thus the value $h_w/l_w = 1.63$ governs for all wall piers. The coefficient α_c varies linearly from 3.0 for $h_w/l_w = 1.5$ to 2.0 for $h_w/l_w = 2.0$.

$$\alpha_c = 3.0 - 1.0(1.63 - 1.5)/(2.0 - 1.5) = 2.74$$

As prescribed in §1909.3.4.1, the shear strength reduction factor, ϕ, shall be 0.6 for the design of walls if their nominal shear strength is less than the shear corresponding to development of their nominal flexural strength. For the 11-foot long wall piers: §1921.6.5.3

$$\phi V_n = 0.6(16'')l_w\left[2.74\sqrt{4{,}000} + \rho_n(60{,}000\,\text{psi})\right] = l_w(1.66\,\text{k}-\text{in.} + 576\,\text{k}-\text{in.}\,\rho_n)$$

For the wall sections with highest shear, the amount of horizontal shear reinforcement is given in Table 5-8.

Table 5-8. Design for shear by the UBC

Level	*Grid Line*	l_w *(in.)*	V_E *(kips)*	*Horizontal Reinforcement*	ρ_n	ϕV_n *(kips)*	$V_u/\phi A_{cv}\sqrt{f'_c}$ (1)
4th	C	132	371	#4@10" E.F.	0.00250	409	4.63
4th	D	132	544	#6@10" E.F.	0.00550	637	6.79
1st	C	132	283	#4@10" E.F.	0.00250	409	3.53
1st	D	240	731	#4@10" E.F.	0.00250	744	5.02
1st	E	132	316	#4@10" E.F.	0.00250	409	3.95

Note:

1. Under §1921.6.5.6, the value of $V_u/\phi A_{cv}\sqrt{f'_c}$ shall not exceed 10 for any wall pier, or 8 for an entire wall section.

As shown above, for all wall pier locations except the 4th floor at Line D, the minimum reinforcement ratio of 0.0025 (required under §1921.6.2.1) is sufficient to meet UBC shear strength requirements.

6b. Design using Blue Book recommendations.

Shear demand. **SEAOC 402.8, C402.8**

To comply with the Blue Book requirement of providing shear strength in excess of the shear corresponding to wall flexural strength, an amplified shear demand must be considered. For this Design Example, shear strength in excess of that corresponding to the development of probable flexural strength will be provided. This has been calculated by the plastic analysis in Part 5 of this Design Example as $V = 2{,}420\,\text{kips}$ at the base of the wall.

Section C402.8 of the Blue Book Commentary gives the following equation for the shear amplification factor, ω_v, that accounts for inelastic dynamic effects. For application to designs according to the UBC, the amplification factor recommended by Paulay and Priestley [1992] can be reduced by a factor of 0.85, because the Paulay and Priestley recommendations use a different strength reduction factor, ϕ, than does the UBC.

ω_v = 0.85(0.9 + n / 10), for buildings up to 6 stories, where n = number of stories

= 0.85(0.9 + 6 / 10) = 1.28

As indicated in the Blue Book, the ω_v factor is derived for analysis using inverted triangular distributions of lateral forces. If a response spectrum analysis is carried out, a slightly lower ω_v factor can be justified in some cases.

At the base of the wall, the magnified shear demand V_u* is calculated as follows:

$$V_u^* = \omega_v (M_{pr}/M_u)(V_E) = (\omega_v 2{,}420\,\text{kips}) = 1.28(2{,}420) = 3{,}100\,\text{kips}$$

In the plastic analysis, the amplification effect considered by ω_v can instead be considered by using a different vertical distribution of the lateral forces, f_{xi}. Rather than using the inverted triangular distribution, a vertical distribution with a resultant located lower in the building, such as a uniform distribution pattern, could be used in the plastic analysis to give shear forces.

Shear capacity.

Since we are designing for the nominal shear strength to exceed the shear corresponding to flexural strength, a strength reduction factor, ϕ, of 0.85 can be used. As before, UBC Equation (21-6) is used to calculate shear capacity:

$$V_n = A_{cv}\left(\alpha_c \sqrt{f'_c} + \rho_n f_y\right) \tag{21-7}$$

$$\phi V_n = 0.85(16'')\,l_w\left[2.74\sqrt{4{,}000} + \rho_n(60{,}000\,\text{psi})\right] = l_w(2.36\,\text{k}-\text{in.} + 816\,\text{k}-\text{in.}\rho_n)$$

For the shear demand of 3100 k over the net wall length of 42 feet (504 inches) at the first floor, the required amount of horizontal reinforcement is calculated:

$$\phi V_n = 504(2.36 + 816\rho_n) = 1{,}190 + 411{,}000\rho_n \geq 3{,}100$$

$$\rho_n = (3{,}100\,\text{k} - 1{,}190\,\text{k})/411{,}000 = 0.00464$$

Try #6 @ 12" o.c. each face

$$\rho_n = 2(0.44\,\text{in.}^2)/(12'' \times 16'') = 0.00458 \qquad o.k.$$

For the other stories of the building, the shear demands are magnified from the analysis results by the same proportion as for the first floor. The recommended amount of horizontal reinforcement can be calculated as shown in the Table 5-9.

Table 5-9. Design for shear by the Blue Book recommendations

Level	V_E *(kips)*	V_u * *(kips)* (1)	l_w *net (in.)*	*Horizontal Reinforcement*	ρ_n	ϕV_n *(kips)*
6th	338	788	264	#5@12" E.F.	0.00323	1,320
5th	656	1,530	264	#6@12" E.F.	0.00458	1,610
4th	915	2,130	264	#6@8" E.F.	0.00688	2,100
3rd	1,150	2,680	504	#6@12" E.F.	0.00458	3,070
2nd	1,250	2,920	504	#6@12" E.F.	0.00458	3,070
1st	1,310	3,100	504	#6@12" E.F.	0.00458	3,070

Note:

1. V_u * = magnified shear demand.

At the 4th floor wall piers, the vertical reinforcement must be increased from #7@12" to #8@12" to provide $\rho_v \geq \rho_n$, per §1921.6.55.5. The Blue Book deletes this requirement for the reasons given in Blue Book §C402.9. However, in this case, the increase in flexural strength of the 4th floor wall piers is desirable, as discussed in Part 5C, above.

6c. Recommended shear reinforcement.

A comparison of the Tables 5-8 and 5-9 shows that the Blue Book recommendations for ensuring that shear strength exceeds flexural capacity results in increased horizontal reinforcement compared to that required by the UBC. The Blue Book approach is recommended, as it leads to more ductile wall behavior.

7. Boundary zone detailing of wall piers.

The UBC gives two alternatives for determining whether or not boundary zone detailing needs to be provided: a simplified procedure (§1921.6.6.4), and a strain calculation procedure (§1921.6.6.5). For this Design Example, the simplified procedure will be used, and for comparison the Blue Book recommendations for the strain calculation procedure will be checked. For an illustration of the UBC strain calculation procedure, see Design Example 4.

7a. UBC simplified procedure. §1921.6.6.4

Under the requirement of §1921.6.6.4, boundary zone detailing need not be provided in the example wall if the following conditions are met:

$$P_u \le 0.10 A_g f'_c \qquad (P_u \le 0.05 A_g f'_c \text{ for unsymmetrical wall sections})$$

and either

$$M_u / (V_u l_w) \le 1.0$$

or

$$V_u \le 3 A_{cv} \sqrt{f'_c}$$

For the critical piers of the example wall, $P_u / A_g f'_c$ calculated as shown in Table 5-10. All of the piers are geometrically unsymmetrical, except for those on Line D at the 1st, 2nd, and 3rd stories. Of the unsymmetrical piers, only those at the 6th floor have $P_u / A_g f'_c \le 0.005$ and $V_u \le 3 A_{cv} \sqrt{f'_c}$. All three of the symmetrical piers have $P_u / A_g f'_c \le 0.01$ and $V_u \le 3 A_{cv} \sqrt{f'_c}$. Therefore all piers require boundary confinement except those at the 6th floor, and those on Line D at the 1st, 2nd, and 3rd floors.

The required boundary zone length is calculated as a function of $P_u / A_g f'_c$ per §1921.6.6.4. The code requires that shear walls and portions of shear walls not meeting the conditions of §1921.6.6.4 and having $P_u < 0.35 P_o$ shall have boundary zones at each end over a distance that varies linearly from $0.25 l_w$ to $0.15 l_w$ as P_u varies from $0.35 P_o$ to $0.15 P_o$. The boundary zone shall have a minimum length of $0.15 l_w$ and shall be detailed in accordance with §1921.6.6.6. The results of this determination are shown in Table 5-10.

Table 5-10. Boundary zone strength requirement by the UBC simplified procedure

Level	*Line*	P_u $(1.44P_D + 0.5P_L + P_E)$ *(kips)*	A_g *(in.²)*	$\frac{P_u}{A_g f'_c}$	*(Required Boundary Length) ÷ l_w*	*Required Boundary Length (in.)*
6th	C,D	388	2,300	0.042	not required	not required
4th	D	1,675	2,300	0.182	0.166	21.9
1st	C	3,148	2,300	0.342	0.246	32.5
1st	E	2,611	2,300	0.284	0.217	28.6
1st	D	1,250	4,030	0.078	not required	not required

At the column end of each wall pier, confining the 8 column bars plus two wall-web bars gives a boundary zone length of 34 inches. At the inside (doorway) end of each wall pier, confining 8 bars give a boundary zone length of 39 inches. The confinement details are shown in Figure 5-12. The required area of boundary ties is calculated according to Equation (21-10):

$$A_{sh} = 0.09 s h_c f'_c / f_y \tag{21-10}$$

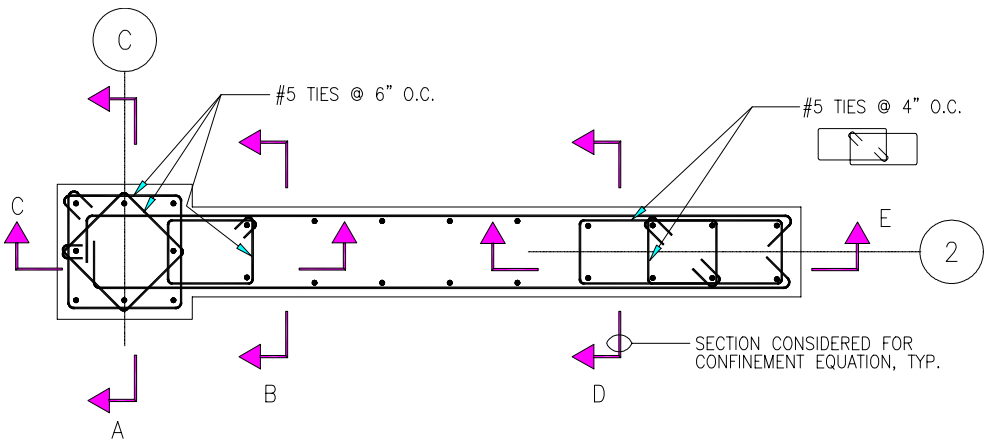

Figure 5-12. Boundary ties required by the UBC simplified procedure

Calculations of A_{sh} are given in Table 5-11, corresponding to section cuts A, B, C, D, and E through the boundary zones as shown in Figure 5-10.

Table 5-11. Required boundary zone ties by the UBC simplified procedure

Section Cut	h_c (in.)	s (in.)	A_{sh} Required (in.^{2})	Tie legs	A_{sh} Provided (in.^{2})
A	20.5	6	0.74	3-#5	0.93
B	12.5	6	0.45	2-#5	0.62
C	32	6	1.12	4-#5	1.24
D	12.5	4	0.45	2-#5	0.62
E	37.5	4	0.90	4-#5	1.24

Note:
1. See Figure 5-12.

7b. Blue Book recommendations. SEAOC §402.11

Section 402.11 of the Blue Book contains significant revisions to the UBC provisions for wall boundary confinement. Sections 402.11.1 and 402.11.2 revise definitions used in the strain calculation procedure of §1921.6.6.5. Blue Book §402.11.3 adds the following two exceptions to the UBC procedure:

> ***Exception 1***: Boundary zone details need not be provided where the neutral axis depth c'_u is less than $0.15l_w$.
>
> ***Exception 2***: The length of wall section at the compression boundary over which boundary zone detailing is to be provided may be taken as c_c, where c_c is the larger of $c'_u = 0.1l_w$ or $c'_u/2$.

In applying these recommendations to the example wall, the wall piers with the largest neutral axis depth-to-length ratio, c'_u/l_w, govern the design. The largest neutral axis depth at the column end of a wall pier occurs at the 1st floor at Line C, where a large downward earthquake axial force occurs:

$$P'_u = (1.2P_D + 0.5P_L) + P_E = 1{,}300 \text{ kips} + 1{,}600 \text{ kips} = 2{,}900 \text{ kips}$$

The neutral axis depth, c'_u, for this case is calculated by PCACOL to be 48 inches.

$$c'_u/l_w = 48''/132'' = 0.36 \geq 0.15 \text{ therefore boundary zone detailing is required}$$

$$c_c = c'_u - 0.1l_w = 48'' - 0.1(132'') = 35 \text{ in.} \qquad \textit{governs}$$

$$c_c = c'_u/2 = 48''/2 = 24 \text{ in.} \qquad \textit{does not govern}$$

The calculation of $c_c = 35$ inches can be compared to the required UBC boundary length of 32.5 inches shown in the Table 5-10.

The largest neutral axis depth at the inside (doorway) end of a wall pier occurs at the 1st floor Line E. Compression at this end of the wall pier corresponds to the loading direction that has earthquake axial force acting upward:

$$P'_u = (1.2P_D + 0.5P_L) + P_E = 1{,}200 \text{ kips} - 1{,}180 \text{ kips} = 20 \text{ kips}$$

The neutral axis depth, c'_u, for this case is calculated by PCACOL to be 20 inches.

$$c'_u/l_w = 20''/132'' = 0.15 \geq 0.15$$

Thus, the requirement for boundary confinement at the inside (doorway) ends of the wall piers is marginal.

$$c_c = c'_u - 0.1 l_w = 20'' - 0.1(132'') = 7 \text{ in.} \qquad \textit{does not govern}$$

$$c_c = c'_u / 2 = 20''/2 = 10 \text{ in.} \qquad \textit{governs}$$

The calculation of $c_c = 10''$ can be compared to the required boundary length of 28.6 inches shown in the Table 5-10. Figure 5-6 shows the ties resulting from the Blue Book recommendation, which can be compared to those required by the UBC simplified procedure, shown in Figure 5-12.

8. Detailing of coupling beams.

The detailing of coupling beams may require a number of preliminary design iterations to determine required bar sizes and the lateral dimensions of the diagonal bar group. Preliminary design iterations are not shown in this Design Example.

8a. Layering of reinforcement.

For this Design Example, the recommended layering of reinforcement in the coupling beams is shown in Figure 5-13. The proposed layering corresponds to a clear cover of 1 inch in the coupling beam and 1 3/8 inches in the wall pier.

Section 1921.6.10.3 requires transverse reinforcement around each group of diagonal bars of the coupling beam. Figure 5-13 assumes that these ties are No. 4 in size and extend over the portion of the diagonal bars within the coupling beam length, as shown in Figure 5-14. Thus the diagonal bars, but not the ties around them, must pass between the reinforcement curtains of the wall pier.

The layering shown in Figure 5-13 results in a diagonal bar cage with lateral “core” dimensions of 9.0 inches by 14.8 inches, measured outside-to-outside of the ties. These dimensions conform to the requirement of §1921.6.10.2 that the lateral core dimensions be “not less than $b_w/2$ or 4 inches.”

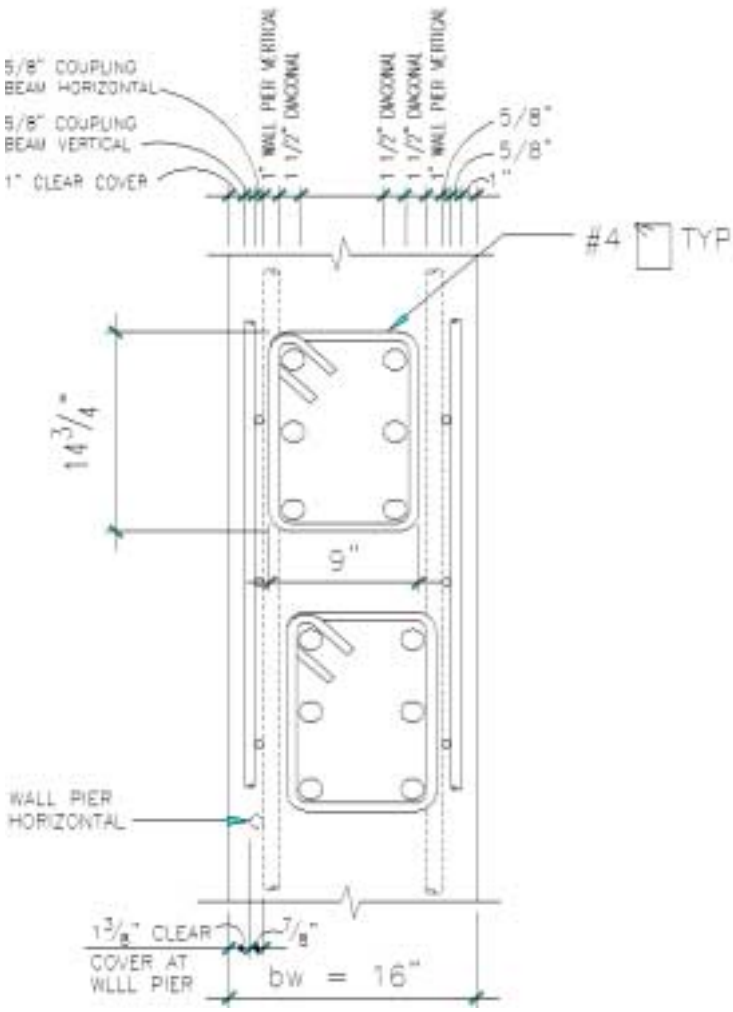

Figure 5-13. Section through coupling beam showing layering of reinforcement

8b. **Ties around diagonal bars.** **§1921.4.4**

Under the requirements of §1921.6.10.3, the required transverse reinforcement around diagonal bars must conform to §1921.4.4.1 through §1921.4.4.3. Section 1921.4.4.2 requires a maximum tie spacing of 4 inches or one-quarter of the minimum member dimension.

Equations (21-3) and (21-4) must be checked in each direction.

$$A_{sh} = 0.3\left(sh_c\, f'_c / f_y\right)\left[\left(A_g / A_{ch}\right) - 1\right] \tag{21-3}$$

$$A_{sh} = 0.09 sh_c\, f'_c / f_y \tag{21-4}$$

The quantity A_g is calculated assuming the minimum cover per §1907.7 around each diagonal bar core. For walls with No. 11 bars and smaller, without exposure to weather, this minimum cover equals ¾ inch. Thus:

$$A_g = [9.0 + 2(0.75)] \times [14.8 + 2(0.75)] = 10.5 \times 16.3 = 171 \text{ in. and}$$

$$A_{ch} = 9.0 \times 14.8 = 133 \text{ in.}$$

Although A_{ch} is based on outside-to-outside of tie dimensions, h_c is based on center-to-center of tie dimensions. Assuming No. 4 ties, h_c = 9.0 – 0.5 = 8.5 inches in the horizontal direction, and h_c = 14.8 – 0.5 = 14.3 inches in the other lateral dimension. For h_c = 8.5:

$$A_{sh} = 0.3(sh_c f'_c / f_{yh})[(A_g / A_{ch}) - 1] \tag{21-3}$$

$$= 0.3[(4'')(8.5'')(4\,\text{ksi})/60\,\text{ksi}](171/133 - 1) = 0.194\,\text{in.}^2$$

$$A_{sh} = 0.09 sh_c f'_c / f_{yh} = 0.09\,(4'')(8.5'')(4\,\text{ksi})/(60\,\text{ksi}) = 0.204\,\text{in.}^2 \quad \textit{governs} \tag{21-4}$$

For $h_c = 14.3$:

$$A_{sh} = 0.3(sh_c f'_c / f_{yh})[(A_g / A_{ch}) - 1] \tag{21-3}$$

$$= 0.3\,[(4'')(14.3'')(4\,\text{ksi})/60\,\text{ksi}](171/133 - 1) = 0.327\,\text{in.}^2$$

$$A_{sh} = 0.09 sh_c f'_c / f_{yh} = 0.09(4'')(14.3'')(4\,\text{ksi})/(60\,\text{ksi}) = 0.343\,\text{in.}^2 \quad \textit{governs} \tag{21-4}$$

A single #4 tie around the six diagonal bars provides two tie legs in each direction and A_{sh} = 0.40 in.^{2} A #3 perimeter tie with a #3 crosstie would provide $A_{sh} = 0.22\,\text{in.}^2$ across the shorter core direction and $A_{sh} = 0.33\,\text{in.}^2$ across the longer core direction, which would not quite meet the A_{sh} requirement of 0.343 in.^{2}

Per §1921.4.4.3, crossties shall not be spaced more than 14 inches on center. For the heaviest diagonal reinforcement of 6-#10 bars, the center-to-center dimension of the #10 bars is given as 12 inches in Figure 5-14. The center-to-center hoop dimension in this direction thus equals 12 inches plus one diameter of a #10 bar plus one diameter of a #4 tie, equal to 12.0 + 1.27 + 0.5 = 13.8 inches. Since this is less than 14 inches, a crosstie is not needed.

The diagonal bars must be developed for tension into the wall piers. Following the recommendation of Paulay and Priestley [1992], the bars are extended a distance of $1.5l_d$ beyond the face of the supporting wall pier, as shown in Figure 5-14, where l_d is the development length of a straight bar as determined under §1912.2.

Crossties are added at the intersection of the diagonal bars at the center of the coupling beam, and along their development into the wall piers, as shown in Figure 5-14. The crossties are also added in locations where ties around the diagonal bars are not used.

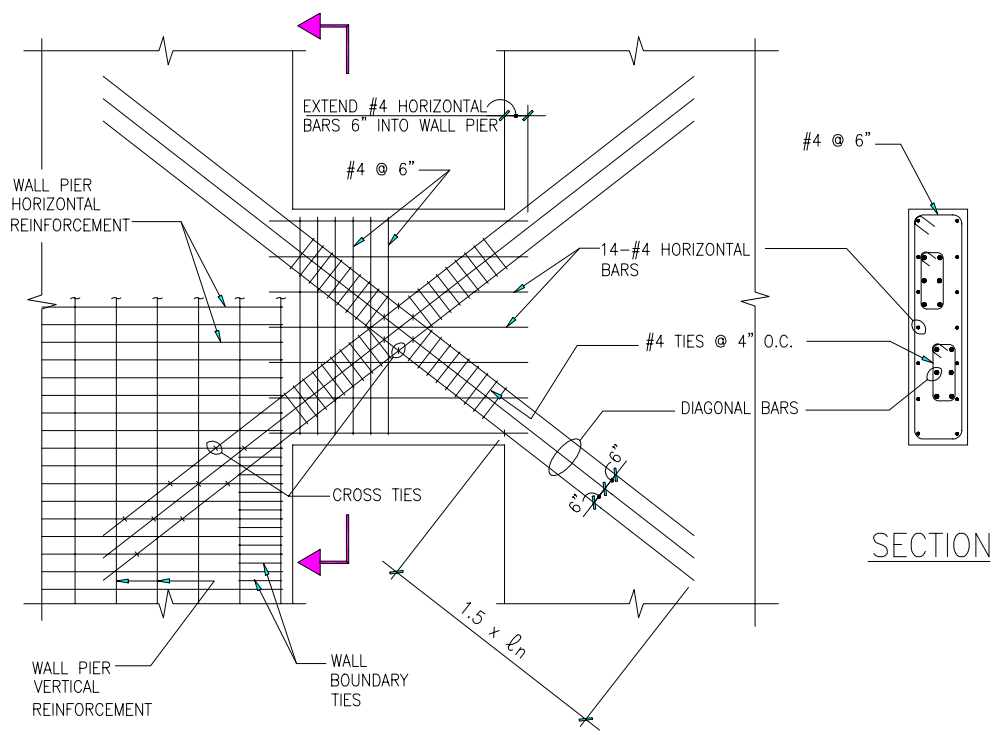

Figure 5-14. Elevation showing detailing of a coupling beam

8c. Reinforcement "parallel and transverse." §1921.6.10.4

Section 1921.6.10.4 requires reinforcement parallel and transverse to the longitudinal axis of the coupling beam, conforming to §1910.5, §1911.8.9, and §1911.8.10. The Blue Book contains less restrictive requirements (in §402.13) for this reinforcement, and the Blue Book Commentary notes that the UBC requirements referenced should not be applied because the diagonal bars, not the parallel and transverse bars, act as the principal flexural and shear reinforcement.

UBC requirements.

By §1911.8.9, for #4@6 transverse (vertical) bars:

$$A_v \geq 0.0015 b_w s = 0.0015\,(16'')(6'') = 0.144\,\text{in.}^2 \leq 0.40\ \text{in.}^2 \qquad o.k.$$

By §1911.8.10, for 14-#4 longitudinal (horizontal) bars:

$$A_{vh} \geq 0.0025 b_w s_2 = 0.0025\,(16'')(72''/7) = 0.41\,\text{in.}^2 \cong 0.40\ \text{in.}^2 \qquad o.k.$$

By §1910.5.1:

$$A_{s,min} = 200\, b_w d / f_y = 200\,(16'')(0.8 \times 72'')/60{,}000\,\text{psi} = 3.07\ \text{in.}^2 \qquad (10\text{-}3)$$

This requires 7-#6 longitudinal bars (A_s = 7(0.44 in.^{2}) = 3.08 in.^{2}) both top and bottom of the coupling beam, or 14-#6 longitudinal bars total. Per the discussion below, these are not recommended by SEAOC to be used, and are not shown in Figure 5-14.

Blue Book recommendations.

Blue Book Commentary §C402.13 cautions against providing excess longitudinal reinforcement in the coupling beam, as required by the application of UBC §1910.5.1. The 1999 ACI code eliminates the requirement of UBC §1910.5.1.

The Blue Book recommends using less longitudinal reinforcement. This can be justified on the basis of UBC §1910.5.3, which states that the requirements of §1910.5.1 need not be applied if the reinforcement provided is “at least one-third greater than that required by analysis.” Since the diagonal bars resist the entire flexural tension forces, it could be interpreted that no additional longitudinal reinforcement is required by analysis.

In §402.13 of the Blue Book requires the reinforcement parallel to the longitudinal axis of the beam to be at least No. 3 in size, spaced at not more than 12 inches on center. The reinforcement transverse to the longitudinal axis of the beam must be at least No. 3 in size, spaced at not more than 6 inches on center.

Figure 5-14 shows the recommended parallel and transverse reinforcement: 14-#4 bars longitudinally and #4 ties @ 6" transversely.

Per the Blue Book recommendations of §402.13, the longitudinal reinforcement is extended 6 inches into the wall pier, as shown in Figure 5-14, but is *not* developed for tension.

References

ASCE, 1971, *Plastic Design in Steel, A Guide and Commentary,* American Society of Civil Engineers, New York.

ATC-40, 1996. *Seismic Evaluation and Retrofit of Concrete Buildings,* Applied Technology Council, Redwood City, California.

FEMA 273, 1997. *NEHRP Guidelines for the Seismic Rehabilitation of Buildings,* Federal Emergency Management Agency, Washington, D.C.

FEMA 306/307, 1998. *Evaluation of Earthquake Damaged Concrete and Masonry Wall Buildings*, Federal Emergency Management Agency, Washington, D.C.

Ghosh, S. K., 1998. *"Design of Reinforced Concrete Buildings under the 1997 UBC,"* Building Standards, May-June, pp. 20-24. International Conference of Building Officials, Washington, D.C.

Maffei, J., 1996. *"*Reinforced Concrete Structural Walls: Beyond the Code*" SEAONC 1996 Fall Seminar Notes,* Structural Engineers of Northern California, San Francisco, California.

Paulay, T., and Priestley, M.J.N., 1992. *Reinforced Concrete and Masonry Buildings, Design for Seismic Resistance,* John Wiley & Sons, New York, N.Y.

PCA, 1999. "*PCACOL: Design and Investigation of Reinforced Concrete Column Sections*," Portland Cement Association, Skokie, Illinois.

Design Example 6
Concrete Special Moment Resisting Frame

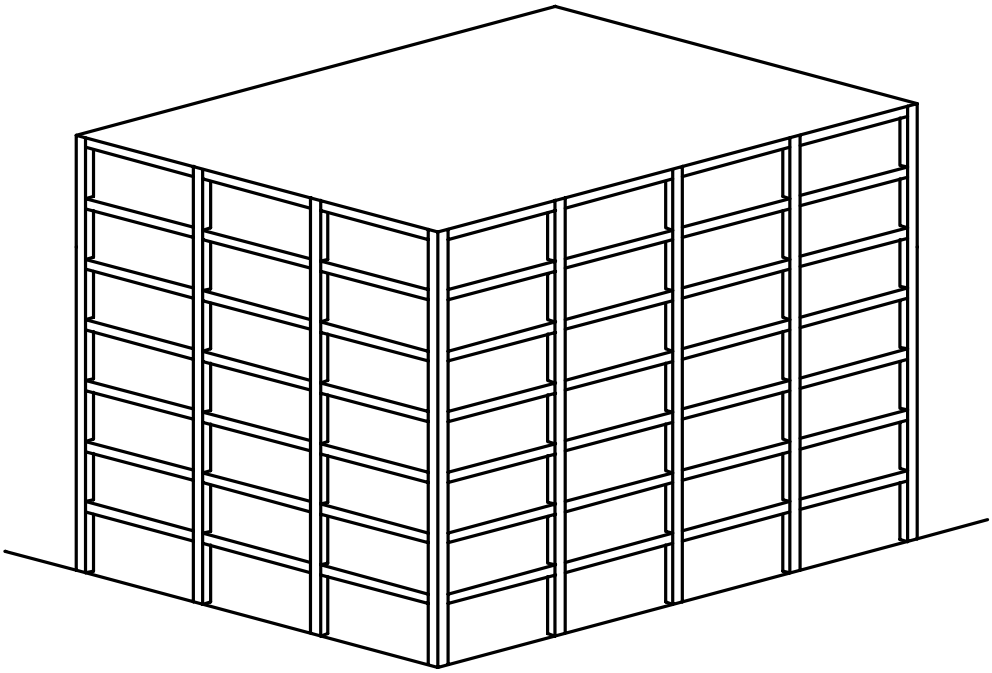

Figure 6-1. Seven-story concrete special moment resisting frame (SMRF) building

Overview

Concrete frame buildings, especially older, nonductile frames, have frequently experienced significant structural damage in earthquakes and a number have collapsed. Following the 1971 San Fernando earthquake, special requirements for ductile concrete frames were introduced in the code. Today these ductile frames are designated as special moment resisting frames (SMRF). All reinforced concrete frame structures built in Seismic Zones 3 and 4 must be SMRF, as required by §1633.2.7. Ordinary moment resisting frames (OMRF) and intermediate moment resisting frames (IMRF) are prohibited in Zones 3 and 4, except that IMRF are permitted for some nonbuilding structures under §1634.2.

In this Design Example, the seismic design of a seven-story concrete SMRF is illustrated. A conceptual elevation of the building is shown in Figure 6-1. The structure is a reinforced concrete office building with the typical floor plan shown in Figure 6-2. The building is seven stories and has a SMRF on each perimeter wall. A typical building elevation is shown in Figure 6-3.

Outline

This Design Example illustrates the following parts of the design process.

1. **Design base shear coefficient and reliability/redundancy factor.**
2. **Vertical and horizontal distribution of shear.**
3. **Frame nodal and member forces.**
4. **Analysis and evaluation of frame drifts.**
5. **Beam design.**
6. **Column design.**
7. **Joint shear analysis.**
8. **Detailing of beams and columns.**
9. **Foundation considerations.**

Given Information

The building has a floor system that consists of post-tensioned slabs and girders. Vertical loads are carried by a frame system. Use of perimeter SMRF frames and interior frames is designed to allow freedom for tenant improvements.

Seismic and site data:

$Z = 0.4$ (Seismic Zone 4)	Table 16-I
$I = 1.0$ (standard occupancy)	Table 16-K
Seismic source type $= A$	
Distance to seismic source $= 10\,\text{km}$	
Soil profile type $= S_D$	

Average story weights (for seismic design)

Roof weights:

Roofing	9.0 psf
Concrete slab (8 in.)	100.0
Girders	27.0
Columns	4.0
Partitions	5.0
Curtain wall	5.0
Mechanical/electrical	5.0
Miscellaneous	3.0
Total	158.0 psf

Typical floor weights:	(3rd-7th floors)	(2nd floor)
Covering	2.0 psf	2.0 psf
Concrete slab (8 in.)	100.0	100.0
Girders	48.0	48.0
Columns	8.0	10.0
Partitions*	10.0	10.0
Curtain wall	10.0	10.0
Mechanical/electrical	5.0	5.0
Miscellaneous	3.0	3.0
Total	186.0 psf	188.0 psf

*Partitions are 2 psf for gravity calculations and 10 psf for seismic calculations.

Structural materials:

Concrete $f_c' = 4{,}000\,\text{psi}$ (regular weight)

Reinforcing A706, Grade 60 $\left(f_y = 60\,\text{ksi}\right)$

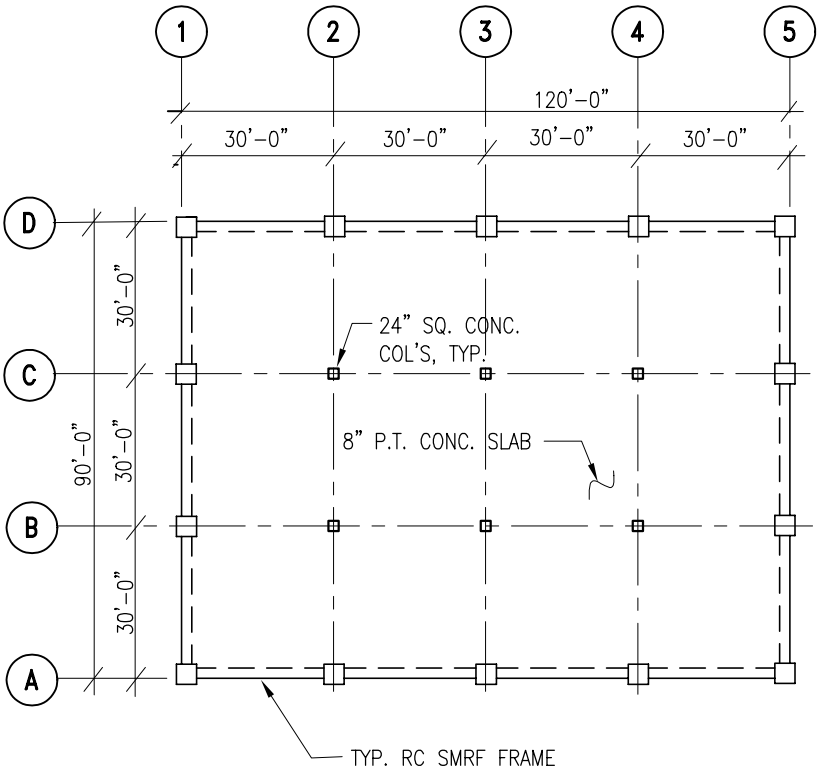

Figure 6-2. Typical floor plan

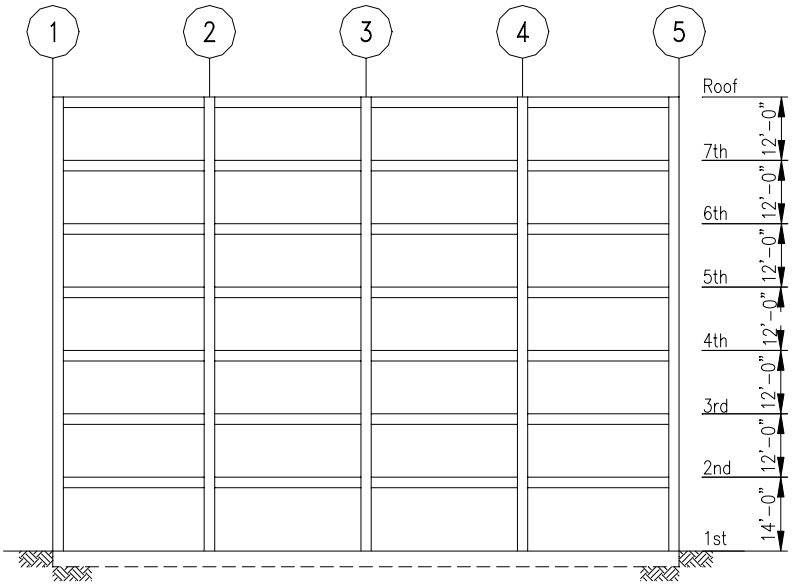

Figure 6-3. Typical frame elevation, Line A

Calculations and Discussion	Code Reference

1. Design base shear coefficient and reliability/redundancy factor.

Two key design parameters, the design base shear coefficient and the reliability/redundancy factor ρ, are determined in this part. The 1997 UBC significantly revised the determination of base shear and introduced the concept of the reliability/redundancy factor to penalize lateral force resisting systems that have little redundancy. Base shear is now determined on a strength basis, whereas base shear in the 1994 UBC was determined on an allowable stress basis, with forces subsequently increased by load factors for concrete strength design. The 1997 UBC also introduced design for vertical components of ground motion E_v.

Period using Method A.

$$T = C_t (h_n)^{3/4} = .030(86)^{3/4} = .85\,\text{sec} \qquad (30\text{-}8)$$

Near source factors for seismic source type A and distance to source $= 10\,\text{km}$

$N_a = 1.0$ Table 16-S

$N_v = 1.2$ Table 16-T

Seismic coefficients for Seismic Zone 4 (0.4) and soil profile type S_D:

$C_a = 0.44\ N_a = 0.44(1.0) = 0.44$ Table 16-Q

$C_v = 0.64\ N_v = 0.64(1.2) = 0.77$ Table 16-R

The R coefficient for a reinforced concrete building with an SMRF system is:

$R = 8.5$ Table 16-N

Note that Table 16-N puts no limitation on building height when a SMRF system is used.

1a. Calculation of design base shear coefficient. §1630.2.2

The four equations for design base shear are as follows:

$$V = \frac{C_v I}{RT} W = \frac{0.77(1.0)}{8.5(0.85)} W = 0.107W \tag{30-4}$$

but the design base shear need not exceed:

$$V = \frac{2.5 C_a I}{R} W = \frac{2.5(.44)(1.0)}{8.5} W = 0.129W \tag{30-5}$$

The total design base shear shall not be less than:

$$V = 0.11 C_a I W = 0.11(.44)(1.0)W = 0.048W \tag{30-6}$$

In addition, for Seismic Zone 4, the total base shear shall also not be less than:

$$V = \frac{0.8 Z N_v I}{R} W = \frac{0.8(.4)(1.20)(1.0)}{8.5} W = 0.045W \tag{30-7}$$

Therefore, Equation (30-4) controls the base shear calculation.

$$\therefore V = 0.107W$$

1b. Calculation of reliability/redundancy factor. §1630.1

The reliability/redundancy factor is determined in accordance with §1630.1 by comparing the shear in the highest loaded moment frame bay with the base shear at that level. This calculation is completed using an iterative process with knowledge of results from the frame analysis presented later in this Design Example. The two columns with the largest base shears are used to define the highest loaded bay. If the columns are part of adjacent bays, 70 percent of their shear values are used in this computation.

Column base shear reactions from computer model of the building are shown below (Figure 6-4). These base shear reactions are based on a computer analysis of the frame as described later, including an accidental torsion moment.

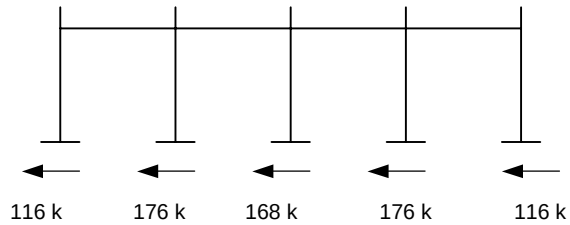

Figure 6-4. Column shears at frame base (from computer analysis with 1.0E_h)

The maximum element story-shear ratio r_{max} is defined as the largest individual element story-shear ratios at or below the two-thirds height of the building. For this building r_{max} is calculated as shown below.

Calculation of r at interior SMRF bay: §1630.1.1

$$r = \frac{0.70(176\,\text{k} + 168\,\text{k})}{1{,}475\,\text{k}} = 0.16$$

Calculation of r at exterior SMRF bay:

$$r = \frac{116\,\text{kips} + 0.70(176\,\text{kips})}{1475\,\text{k}} = 0.16$$

Note that r should be evaluated at all moment frame bays and for the bottom two-thirds levels of the building. Since no other r values control, other calculations are not shown.

Equation (30-3) is used to calculate ρ as shown below.

$$A_B = (120')(90') = 10{,}800\,\text{ft}^2$$

$$\rho = 2 - \frac{20}{r_{max}\sqrt{A_B}} = 2 - \frac{20}{.16\sqrt{10800}} = 0.82 \le 1.0 \qquad (30\text{-}3)$$

$$\therefore \rho = 1.0$$

For moment resisting SMRF frames, ρ must be less than 1.25. If ρ is greater than 1.25, additional bays must be added such that ρ is less than or equal to 1.25.

1c. Vertical component of earthquake ground motion. §1630.1.1

Because the design of the concrete frames will use strength design, the vertical component E_v must be considered in the load combination of Equation (30-1). Determination of E_v is shown below.

$$E_v = 0.5C_a ID = 0.5(0.44)(1.0)W = 0.22W$$

The effect of E_v is added to the gravity loads that are used in combination with horizontal seismic loads.

Thus, the following earthquake load is used in the earthquake load combinations:

$$E = \rho E_h + E_v \tag{30-1}$$

2. Vertical and horizontal distribution of shear. §1628.4 and §1628.5

In this part, the seismic forces on the concrete frame are determined.

2a. Story masses (weights).

Table 6-1. Calculation of building and story weights

Level	*Area (sf)*	w_i *(psf)*	W_I *(kips)*
R	10,800	158.0	1,706
7	10,800	186.0	2,009
6	10,800	186.0	2,009
5	10,800	186.0	2,009
4	10,800	186.0	2,009
3	10,800	186.0	2,009
2	10,800	188.0	2,030
Total	75,600		13,781

2b. **Base shear and vertical distribution of shear.**

Using the results of Part 1a, the base shear is

$$V = .107W = .107(13{,}781\,\text{k}) = 1{,}475\,\text{kips}$$

The building period is 0.85 seconds using Method A. Therefore, the concentrated force at the top is determined from §1630.5 as follows

$$F_t = 0.07TV = 0.07(0.85)(1{,}475\,\text{k}) = 87\,\text{kips} \tag{30-14}$$

The vertical distribution of shear is determined from Equation (30-13)

$$V = F_t + \sum_{i=1}^{n} F_i \tag{30-13}$$

The calculation of story forces and story shears is shown in Table 6-2 below.

Table 6-2. Vertical distribution of shear

Level	W_i *(k)*	ΣW_i *(k)*	h_i *(ft)*	*Story H (ft)*	$W_i h_i$ *(k-ft)*	$\frac{W_i h_i}{\Sigma W_i h_i}$ *(%)*	F_i *(k)*	ΣF_i *(k)*
Ft =							87	
R	1,706	1,706	86	12	146,750	22%	301	388
7	2,009	3,715	74	12	148,651	22%	30	304
6	2,009	5,724	62	12	124,546	18%	255	255
5	2,009	7,733	50	12	100,440	15%	206	206
4	2,009	9,742	38	12	76,334	11%	156	544
3	2,009	11,750	26	12	52,229	8%	107	651
2	2,030	13,781	14	14	28,426	4%	58	709
Totals	13,781				677,376	100%	1,475	

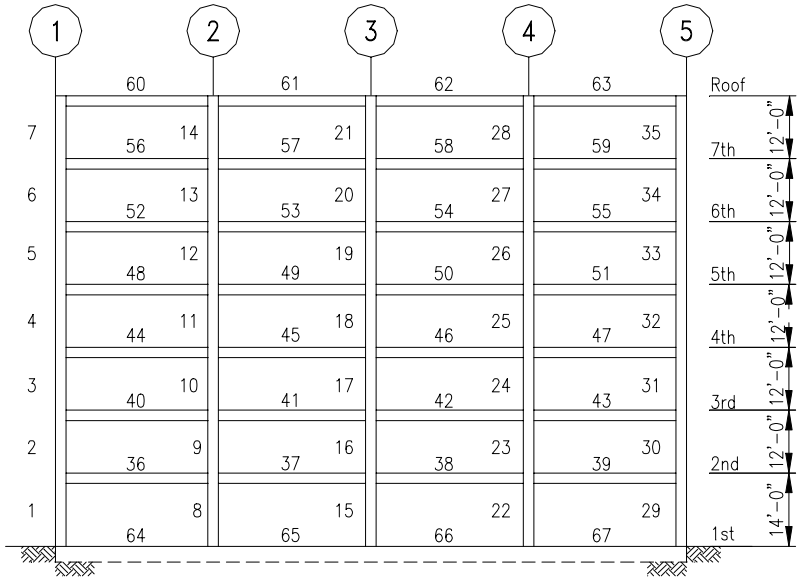

Figure 6-5. Computer model of the frame on Line A

3. Frame nodal and member forces.

The longitudinal frame along Line A is designed in this part. First, dead and live loads on the beams are determined using a tributary width of 15 feet. The gravity loads applied to the beams in the frame analysis are summarized below in Table 6-3.

Table 6-3. Beam gravity loads for analysis

Framing Level	*Dead Load (plf)*	*Live Load (plf)*
Roof	2,250	300
7th Floor	2,886	750
6th Floor	2,886	750
5th Floor	2,886	750
4th Floor	2,886	750
3rd Floor	2,886	750
2nd Floor	2,879	750

A torsional analysis of the building using a 5 percent accidental torsion (using an eccentricity equivalent to 5 percent of the perpendicular building dimension) gives results such that all frames on the four faces of the building resist torsional shears of approximately 2 percent of the base shear. Thus the seismic forces in the frame analysis were increased by 2 percent to account for accidental torsion (per

§1630.7). Each of the perimeter frames on Lines A, D, 1 and 5, will be designed to resist a base shear of 52 percent of the total building design base shear, V.

A two dimensional frame analysis is performed for the frame along Line A. The frame forces are determined from story forces above. Forces are distributed to frame nodes in proportion to their location along Line A. Thus, at longitudinal frames (Lines A and D), 12.5 percent of the story force is applied to end column nodes and 25 percent of the story force is applied to the interior column nodes. The force distribution at transverse frames (Lines 1 and 5) is 16.7 percent to exterior column nodes and 33 percent to interior column nodes. The frame nodal loads for longitudinal and transverse frames are summarized below in Table 6-4. Frame joint and member numbers are shown in Figure 6-5.

Table 6-4. Column nodal forces for analysis

Level	*Story Forces (kips)*	*Long. Frame End Column Node Forces (kips)*	*Long. Frame Interior Col. Node Forces (kips)*	*Trans. Frame End Column Node Forces (kips)*	*Trans. Frame Interior Col. Node Forces (kips)*
R	388	24.7	49.5	33.0	66.0
7	304	19.4	38.8	25.9	51.7
6	255	16.3	32.5	21.7	43.4
5	206	13.1	26.2	17.5	35.0
4	156	10.0	19.9	13.3	26.6
3	107	6.8	13.6	9.1	18.2
2	58	3.7	7.4	4.9	9.9
Total	1,475				

The loads shown in Table 6-4 add to 50 percent of the design base shear. To account for torsion, a load factor of 1.02 was used in the frame analysis program. This problem was solved on a two dimensional frame program. Any elastic finite element analysis program could be used, including those with three dimensional capability.

4. Analysis and evaluation of frame drifts.

Under §1630.10.2, story drifts are limited to 0.020 times story heights for drifts corresponding to the maximum inelastic response displacement Δ_m for structures with periods 0.7 seconds or greater. Under §1630.10.2

$$\Delta_m = 0.7R\Delta_s$$

or:

$$\Delta_m = 0.7(8.5)\Delta_s = 5.95\Delta_s$$

Table 6-5 summarizes the calculation of the allowable frame drifts.

Table 6-5. Allowable story deformations and displacements

Story	Total Height (ft)	Story Height (ft)	Allowable Δ_S (in.)	Sum $\Sigma\Delta_S$ (in.)	Allowable Δ_M (in.)	Sum $\Sigma\Delta_M$ (in.)
R	86	12	0.484	3.469	2.88	20.64
7	74	12	0.484	2.985	2.88	17.76
6	62	12	0.484	2.501	2.88	14.88
5	50	12	0.484	2.017	2.88	12.00
4	38	12	0.484	1.533	2.88	9.12
3	26	12	0.484	1.049	2.88	6.24
2	14	14	0.565	0.565	3.36	3.36

The frame analysis is thus performed using a standard frame analysis program. Columns, beams, and grade beams were sized to meet allowable drift limits. Member section properties were chosen to represent the cracked structure. In accordance with §1910.11.1, 70 percent of the gross section properties are used for columns and 35 percent of gross section properties are used for beams to estimate the contribution of cracked sections on frame behavior.

Selected sections were 42×42 corner columns, 36×44 interior columns, 30x48 beams and 60×48 foundation grade beams. The designer must size a frame which meets drift limitations and also meets strength criteria. For the design of this frame, the controlling parameters are frame stiffness and strength of beams. Using the member sizes chosen, frame analysis gives the lateral story displacements, given below in Table 6-6. Note that the frame analysis gives Δ_s deflections, thus the comparison is made using Δ_s deflections and that the ρ factor is not used in the deflection analysis.

Table 6-6. Displacements determined from analysis

Story	Total Height (ft)	Story Height (ft)	From Analysis Δ_S Story Drifts (in.)	Maximum Allowable Δ_S Story Drifts (in.)	From Analysis $\Sigma\Delta_S$ (in.)	Maximum Allowable $\Sigma\Delta_S$ (in.)
R	86	12		0.48	3.18	3.47
7	74	12	0.38	0.48	2.80	2.98
6	62	12	0.48	0.48	2.34	2.50
5	50	12	0.48	0.48	1.82	2.02
4	38	12	0.48	0.48	1.34	1.53
3	26	12	0.47	0.48	0.87	1.05
2	14	14	0.44	0.56	0.43	0.57

As shown in Table 6-6, story drifts are determined to be within allowable limits. The iteration between frame stiffness and member strengths has resulted in a frame design with conservative drifts. The designer must iterate between frame analysis and member section design.

5. Beam design.

5a. Load combinations.

The next procedure is frame member design. Frame beams are designed to support gravity loads and resist seismic forces. Beams are sized to limit frame drift and to resist the corresponding moment with a nominal strength ϕM_n. The ϕ factor for bending analysis is 0.90. The controlling load combinations are given in §1612.2.1 and are summarized below. Note that Exception 2 of §1612.2.1 requires the load combinations to be multiplied by 1.1 as shown below.

$$1.1(1.2D + 0.5L + 1.0E + 0.22D) = 1.58D + 0.55L + 1.1E \qquad (12\text{-}5)$$

$$1.1(0.9D - 0.22D - 1.1E) = 0.75D - 1.1E \qquad (12\text{-}6)$$

Note: The SEAOC Seismology Committee does not support the 1.1 factor for concrete and masonry elements under seismic loads and the 1.1 factor is not included in the 1999 SEAOC Blue Book. However, until ICBO makes a different ruling, it is part of the 1997 UBC and is thus included in this Design Example.

5b. Design requirements for frame beams.

The nominal beam strength is calculated using the following formulas and ignoring compression steel for simplicity:

$$\phi M_n = \phi A_s f_y \left(d - \frac{a}{2} \right) \geq M_u$$

Note that historic practice has been to consider the frame beam to have a rectangular section without consideration of the contribution of the adjacent slab for both compression and tension stresses. That is still true for design under the 1997 UBC. The ACI-318-99 has included new provisions requiring that the adjacent slab be included in consideration of the frame beam analysis. These provisions will be required in the adoption of future codes.

The probable flexural strength, M_{pr}, is calculated per §1921.5.1.1 using $1.25 f_y$ for the reinforcing steel stress. Recalculating the beam strength using $\phi = 1.0$, thus:

$$M_{pr} = 1.25\, A_s\, f_y \left(d - \frac{a_{pr}}{2} \right)$$

The shear strength of the beam must be designed to be greater than required in order to resist M_{pr}, at both ends of the beam. L is the distance from column face to column face. For this Design Example the distance is $L = 30$ ft – 48 in. (columns) $=$ 26 ft – 0 in. The ϕ factor for shear analysis is 0.85 per §1909.3.2.3. Thus, the ultimate shear load is calculated as:

$$V_u = \frac{+M_{pr} - (-M_{pr})}{L} + \frac{w_{FACTORED,GRAVITY}\, L}{2} \le \phi V_n$$

$$\phi V_n = \phi V_c + \phi V_s$$

$$\phi V_c = 0; \quad \phi V_s = .85\, A_v\, f_y \frac{d}{s}$$

Under §1921.3.4.2, the shear contribution from concrete V_c is considered zero when both of the following conditions occur: 1.) the earthquake-induced shear force represents more than one-half of the total shear force; and 2.) factored axial compressive force is less than $A_g\, F'_c/20$ per §1921.3.4.2.

In the region of plastic hinges, transverse ties are required to resist shear forces.

Maximum spacing of ties cannot exceed any of the following: §1921.3.3.2

1. $d/4$.

2. 8 times the diameter of the smallest longitudinal reinforcement.

3. 24 times the diameter of the hoop bars.

4. 12 inches.

An example beam design for Beam 36 (Figure 6-5) is shown. The controlling load combinations, including seismic forces, are Equations (12-5) and (12-6). Depending on the direction of seismic inertial force, seismic moments add with gravity moments at one beam end and subtract at the other end.

Beyond regions of potential plastic hinges, stirrups with seismic ties are required at a maximum spacing of $d/2$ throughout the length of the beam under §1921.3.3.4.

Diagrammatic shear and moment diagrams are shown below in Figure 6-6.

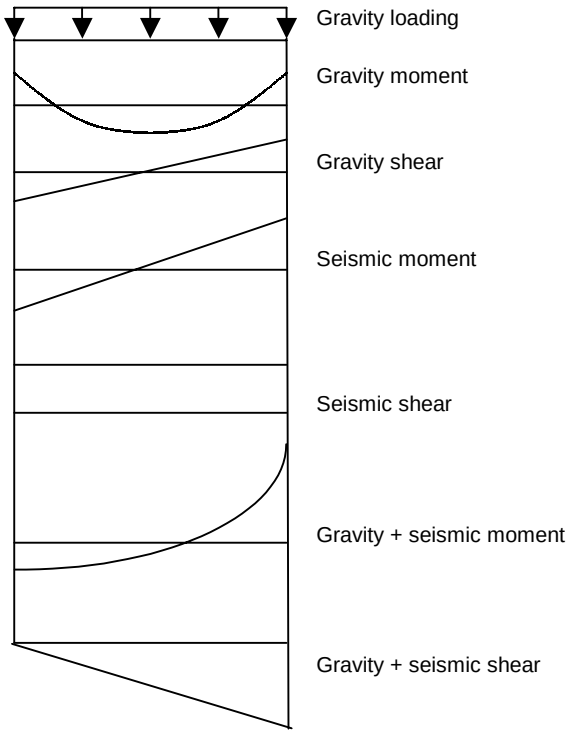

Figure 6-6. Moment and shear diagrams for beams

A review of the moment and shear diagrams for gravity loads and seismic loads (Figure 6-6) will help the designer realize that seismic moment and negative gravity moment at beam ends will be additive for top reinforcement design and subtractive for bottom reinforcement design. Since seismic moment is usually considerably greater than gravity moment, the reinforcement design will be controlled by load combinations including seismic loads. However, greater amounts of top reinforcement will be required than bottom reinforcement. Since the frame behavior produces beam moments as depicted in Figure 6-6, load combination Equation (12-5) will maximize negative moments for top reinforcement design and load combination Equation (12-6) will maximize positive moments for bottom reinforcement design.

An example calculation for Beam 36 is as follows:

From the frame analysis, Equation (12-5), negative moment is –1,422 k-ft. For a beam with $b = 30$ in. and $h = 48$ in., $d = 45$ in.

Try 5-#11 top bars, $A_s = 7.80\,\text{in.}^2$

Per §1921.3.2.1:

$$A_{s,min} = \frac{200 b_w d}{f_y} = \frac{200(30'')(45'')}{60{,}000\,\text{psi}} = 4.5\,\text{in.}^2 \le 7.80\,\text{in.}^2 \therefore \quad o.k.$$

$$a = \frac{(7.80\,\text{in.}^2)(60{,}000\,\text{psi})}{0.85(4.000\,\text{psi})(30'')} = 4.59 \text{ in.}$$

$$\phi M_n = (0.90)(7.80\,\text{in.}^2)(60{,}000\,\text{psi})\left(45'' - \frac{4.59''}{2}\right)\left(\frac{1}{12''}\right)\left(\frac{1\,\text{kip}}{1{,}000\,\text{lbs}}\right)$$

$$= 1{,}498 \text{ k-ft} \ge 1{,}422 \text{ k-ft}$$

$\therefore$ *o.k.*

From the frame analysis, Equation (12-6), positive moment is 905 k-ft.

Try 5-#9 bottom bars, $A_s = 5.0\,\text{in.}^2$

$$a = \frac{(5.0\,\text{in.}^2)(60{,}000\,\text{psi})}{0.85(4000\,\text{psi})(30'')} = 2.94 \text{ in.}$$

$$\phi M_n = (0.90)(5.0\,\text{in.}^2)(60{,}000\,\text{psi})\left(45'' - \frac{2.94''}{2}\right)\left(\frac{1}{12''}\right)\left(\frac{1\,\text{kip}}{1{,}000\,\text{lbs}}\right)$$

$$= 979 \text{ k-ft} \ge 905 \text{ k-ft}$$

$\therefore$ *o.k.*

Thus, the Beam 36 design will have 5-#11 top bars and 5-#9 bottom bars. Note that §1921.3.2.2 requires that positive moment strength (bottom reinforcement) be a minimum 50 percent of negative moment strength at the joints and that neither the positive nor negative moment strength along the beam be less than one-quarter of the strength at either joint (end).

5c. Beam skin reinforcement.

If the effective depth of a beam exceeds 36 inches, longitudinal skin reinforcement shall be distributed along both side faces of a beam for a distance $d/2$ nearest the flexural tension reinforcement per §1910.6.7. The skin reinforcement shall be spaced a maximum of the lesser of $d/6$ or 12 inches. Thus, for a 48-inch deep beam with $d =$ 45 inches, $d/6$ is 7 ½ inches. The beam will have flexural tension regions at the top and bottom of the beam, thus four quantities of A_{sk} are required at the top and bottom of each side.

$$A_{sk} = 0.012(2-30'')(d/12'') = 0.012(45''-30'')(45''/12'') = 0.675\,\text{in.}^2$$

$$A_{sk} = 2(0.675\,\text{in.}^2) = 1.35\,\text{in.}^2$$

$\therefore$ Use 5-#5 bars, $A_{sk} = 1.55\,\text{in.}^2$ each side of beam spaced 7½ inches apart

$\therefore$ *o.k.*

5d. Beam shear design.

As noted above, the beam will also have 5-#5 side bars on each side of the beam. For this Design Example, the assumption is made that 3-#5 side bars each side contribute to the plastic moment. For shear design, the designer allows for plastic hinge formation that will produce shear forces greater than those from frame analysis.

$$V_u = \frac{+M_{pr} - (-M_{pr})}{L} + \frac{w_{GRAVITY}\,L}{2}$$

$$+a = \frac{(1.25)(7.80+1.86)(60{,}000\,\text{psi})}{0.85(4{,}000\,\text{psi})(30'')} = 7.10 \text{ in.}$$

$$+M_{pr} = \left[(1.25)(7.80\,\text{in.}^2)(60{,}000\,\text{psi})\left(45''-\frac{7.10''}{2}\right) + (1.25)(1.86\,\text{in.}^2)(60{,}000\,\text{psi})\right]\left(30''-\frac{7.10''}{2}\right)\left(\frac{1}{12{,}000}\right) = 2{,}328\,\text{k - ft}$$

$$-a_{pr} = \frac{(1.25)(5.0+1.86)(60{,}000\,\text{psi})}{0.85(4{,}000\,\text{psi})(30'')} = 5.04 \text{ in.}$$

$$-M_{pr} = \left[(1.25)(5.0\,\text{in.}^2)(60{,}000\,\text{psi})\left(45''-\frac{5.04''}{2}\right) + (1.25)(1.86\,\text{in.}^2)(60{,}000\,\text{psi})\left(30''-\frac{5.04''}{2}\right)\right]\left(\frac{1}{12{,}000}\right) = 1{,}647\,\text{k - ft}$$

Shear from dead load is calculated from the load combination of Equation (12-5):

$$V_{gravity} = [(1.58)(2{,}879\,\text{plf}) + (0.55)(750\text{plf})]\left(\frac{26'}{2}\right) = 65\,\text{kips}$$

$$\therefore V_u = \frac{(2{,}328\,\text{k - ft} + 1{,}647\,\text{k - ft})}{22'} + 65\,\text{kips} = 246\,\text{kips}$$

The design shear V_u is thus the sum of the shear from the plastic end moments plus the gravity shear.

Seismic stirrups at the plastic hinge regions are calculated as shown below. Note that the plastic hinge region is a distance of $2h$ from the column face.

Try #4 ties with four vertical legs at 6-inch spacing over the 2*h* length (86 inches).

$$\phi V_n = \phi V_c + \phi V_s$$

$$\phi V_c = 0$$

$$\phi V_s = \frac{\phi A_v f_y d}{s}$$

$$\phi V_n = 0 + \frac{0.85(4)(0.20\,\text{in.}^2)(60{,}000\,\text{psi})(45'')}{6''} = 306\,\text{kips} \geq 246\,\text{kips}$$

$\therefore$ *o.k.*

Therefore, use 4 legs, #4 stirrup ties at 6-inch spacing at plastic hinge regions at beam ends.

Seismic stirrups in the beam between plastic hinge regions are calculated as follows.

Try #4 ties at 8-inch spacing:

$$V_u = 181\,\text{kips} + 65\,\text{kips}\left(\frac{13'-3''-2\times 45''}{13'-3''}\right) = 209\,\text{kips}$$

$$\phi V_s = .85(.80\,\text{in.}^2)(60{,}000\,\text{psi})(45'')/8'' = 229\,\text{kips} \geq 209\,\text{kips}$$

$\therefore$ *o.k.*

Therefore, the final design for Beam 36 is a 30-inch wide by 48-inch deep beam with 5-#11 top bars, 5-#9 bottom bars, 5-#5 side bars, and 4 legs - #4 stirrup ties at 6-inch spacing each end with 4 legs - #4 stirrup ties at 8 feet between.

5e. Design of all Frame A beams.

Following these same procedures and using the forces from the frame analysis, the Frame A beam designs for flexural strength are shown in Table 6-7.

Table 6-7. Beam member longitudinal steel design

Member	$M_{u,i}$ *(Eq. 12-6)*	$M_{u,j}$ *(Eq. 12-5)*	*b (in.)*	*h (in.)*	*d (in.)*	*Bar Location*	*No. bars*	*Bar Size*	*Bar Area (in.²)*	A_s *(in.²)*	*a (in.)*	ϕM_n *(k-ft)*	*Bending Results*	*DCR* (1)
36		-1,405	30	48	45	Top	5	#11	1.56	7.80	4.59	1,499	o.k.	**0.94**
	905		30	48	45	Bottom	5	#9	1.00	5.00	2.94	979	o.k.	**0.92**
37		-1,389	30	48	45	Top	5	#11	1.56	7.80	4.59	1,499	o.k.	**0.93**
	858		30	48	45	Bottom	5	#9	1.00	5.00	2.94	979	o.k.	**0.88**
38		-1,392	30	48	45	Top	5	#11	1.56	7.80	4.59	1,499	o.k.	**0.93**
	856		30	48	45	Bottom	5	#9	1.00	5.00	2.94	979	o.k.	**0.87**
39		-1,422	30	48	45	Top	5	#11	1.56	7.80	4.59	1,499	o.k.	**0.95**
	876		30	48	45	Bottom	5	#9	1.00	5.00	2.94	979	o.k.	**0.89**
Level 3														
40		-1,568	30	52	49	Top	5	#11	1.56	7.80	4.59	1,639	o.k.	**0.96**
	1,093		30	52	49	Bottom	5	#9	1.00	5.00	2.94	1,069	o.k.	**1.02**
41		-1,569	30	52	49	Top	5	#11	1.56	7.80	4.59	1,639	o.k.	**0.96**
	1,036		30	52	49	Bottom	5	#9	1.00	5.00	2.94	1,069	o.k.	**0.97**
42		-1,564	30	52	49	Top	5	#11	1.56	7.80	4.59	1,639	o.k.	**0.95**
	1,036		30	52	49	Bottom	5	#9	1.00	5.00	2.94	1,069	o.k.	**0.97**
43		-1,637	30	52	49	Top	5	#11	1.56	7.80	4.59	1,639	o.k.	**1.00**
	1,036		30	52	49	Bottom	5	#9	1.00	5.00	2.94	1,069	o.k.	**0.97**
Level 4														
44		-1,281	30	44	41	Top	5	#11	1.56	7.80	4.59	1,359	o.k.	**0.94**
	781		30	44	41	Bottom	5	#9	1.00	5.00	2.94	889	o.k.	**0.88**
45		-1,304	30	44	41	Top	5	#11	1.56	7.80	4.59	1,359	o.k.	**0.96**
	772		30	44	41	Bottom	5	#9	1.00	5.00	2.94	889	o.k.	**0.87**
46		-1,304	30	44	41	Top	5	#11	1.56	7.80	4.59	1,359	o.k.	**0.96**
	772		30	44	41	Bottom	5	#9	1.00	5.00	2.94	889	o.k.	**0.87**
47		-1,334	30	44	41	Top	5	#11	1.56	7.80	4.59	1,359	o.k.	**0.98**
	781		30	44	41	Bottom	5	#9	1.00	5.00	2.94	889	o.k.	**0.88**

Table 6-7 (continued)

Level 5														
48		-1,273	30	44	41	Top	5	#11	1.56	7.80	4.59	1,359	o.k.	**0.94**
	783		30	44	41	Bottom	5	#9	1.00	5.00	2.94	889	o.k.	**0.88**
49		-1,298	30	44	41	Top	5	#11	1.56	7.80	4.59	1,359	o.k.	**0.96**
	766		30	44	41	Bottom	5	#9	1.00	5.00	2.94	889	o.k.	**0.86**
50		-1,297	30	44	41	Top	5	#11	1.56	7.80	4.59	1,359	o.k.	**0.95**
	766		30	44	41	Bottom	5	#9	1.00	5.00	2.94	889	o.k.	**0.86**
51		-1,343	30	44	41	Top	5	#11	1.56	7.80	4.59	1,359	o.k.	**0.99**
	780		30	44	41	Bottom	5	#9	1.00	5.00	2.94	889	o.k.	**0.88**
Level 6														
52		-854	24	36	33	Top	4	#11	1.56	6.24	4.59	862	o.k.	**0.99**
	337		24	36	33	Bottom	4	#8	0.79	3.16	2.32	453	o.k.	**0.74**
53		-878	24	36	33	Top	4	#11	1.56	6.24	4.59	862	o.k.	**1.00**
	346		24	36	33	Bottom	4	#8	0.79	3.16	2.32	453	o.k.	**0.76**
54		-878	24	36	33	Top	4	#11	1.56	6.24	4.59	862	o.k.	**1.00**
	346		24	36	33	Bottom	4	#8	0.79	3.16	2.32	453	o.k.	**0.76**
55		-887	24	36	33	Top	4	#11	1.56	6.24	4.59	862	o.k.	**1.00**
	346		24	36	33	Bottom	4	#8	0.79	3.16	2.32	453	o.k.	**0.76**
Level 7														
56		-775	24	36	33	Top	4	#11	1.56	6.24	4.59	862	o.k.	**0.90**
	257		24	36	33	Top	4	#8	0.79	3.16	2.32	453	o.k.	**0.57**
57		-799	24	36	33	Top	4	#11	1.56	6.24	4.59	862	o.k.	**0.93**
	267		24	36	33	Top	4	#8	0.79	3.16	2.32	453	o.k.	**0.59**
58		-799	24	36	33	Top	4	#11	1.56	6.24	4.59	862	o.k.	**0.93**
	266		24	36	33	Top	4	#8	0.79	3.16	2.32	453	o.k.	**0.59**
59		-806	24	36	33	Top	4	#11	1.56	6.24	4.59	862	o.k.	**0.93**
	266		24	36	33	Top	4	#8	0.79	3.16	2.32	453	o.k.	**0.59**
Roof														
40		-593	24	36	33	Top	4	#10	1.27	5.08	3.74	712	o.k.	**0.83**
	206		24	36	33	Top	4	#8	0.79	3.16	2.32	453	o.k.	**0.46**
41		-603	24	36	33	Top	4	#10	1.27	5.08	3.74	712	o.k.	**0.85**
	198		24	36	33	Top	4	#8	0.79	3.16	2.32	453	o.k.	**0.44**
42		-599	24	36	33	Top	4	#10	1.27	5.08	3.74	712	o.k.	**0.84**
	196		24	36	33	Top	4	#8	0.79	3.16	2.32	453	o.k.	**0.43**
43		-610	24	36	33	Top	4	#10	1.27	5.08	3.74	712	o.k.	**0.86**
	199		24	36	33	Top	4	#8	0.79	3.16	2.32	453	o.k.	**0.44**

Note:

1. DCR=demand to capacity ratio

With longitudinal beam reinforcement proportioned as indicated in Table 6-7 above, the plastic moment M_{pr} and shear design is as follows. Note that M_{pr} is calculated including contribution of perimeter reinforcement. $V_{U,gravity}$ is calculated as the factored combination of D + L loads : $V_{U,gravity} = 1.58D + 0.55L$.

Table 6-8. Beam member shear reinforcement design

Mem ID	Bar Loc.	A_s T&B	A_s side	a (in.^{2})	M_{pr} (k-ft)	V_{pr} (kips)	$V_{u,GR}$ (kips)	V_u (kips)	ϕV_c (kips)	Ties # legs	A_{vs} (in.^{2})	s (in.)	ϕV_s (kips)	ϕV_n (kips)	Result	DCR (1)
Level 2																
36	Top	5-#11	1.86	7.10	2,389	215	70	285	0.0	4	0.80	6.0	306	306	o.k.	**0.93**
	Bottom	5-#9	1.86	5.04	1,708	154										
37	Top	5-#11	1.86	7.10	2,389	215	70	285	0.0	4	0.80	6.0	306	306	o.k.	**0.93**
	Bottom	5-#9	1.86	5.04	1,708	154										
38	Top	5-#11	1.86	7.10	2,389	215	70	285	0.0	4	0.80	6.0	306	306	o.k.	**0.93**
	Bottom	5-#9	1.86	5.04	1,708	154										
39	Top	5-#11	1.86	7.10	2,389	215	70	285	0.0	4	0.80	6.0	306	306	o.k.	**0.93**
	Bottom	5-#9	1.86	5.04	1,708	154										
Level 3																
40	Top	5-#11	2.64	7.68	2,769	253	70	323	0.0	4	0.80	6.0	333	333	o.k.	**0.97**
	Bottom	5-#9	2.64	5.62	2,028	185										
41	Top	5-#11	2.64	7.68	2,769	253	70	323	0.0	4	0.80	6.0	333	333	o.k.	**0.97**
	Bottom	5-#9	2.64	5.62	2,028	185										
42	Top	5-#11	2.64	7.68	2,769	253	70	323	0.0	4	0.80	6.0	333	333	o.k.	**0.97**
	Bottom	5-#9	2.64	5.62	2,028	185										
43	Top	5-#11	2.64	7.68	2,769	253	70	323	0.0	4	0.80	6.0	333	333	o.k.	**0.97**
	Bottom	5-#9	2.64	5.62	2,028	185										
Level 4																
44	Top	5-#11	1.20	6.62	2,055	182	70	252	0.0	4	0.80	6.0	279	279	o.k.	**0.90**
	Bottom	5-#9	1.20	4.56	1,435	127										
45	Top	5-#11	1.20	6.62	2,055	182	70	252	0.0	4	0.80	6.0	279	279	o.k.	**0.90**
	Bottom	5-#9	1.20	4.56	1,435	127										
46	Top	5-#11	1.20	6.62	2,055	182	70	252	0.0	4	0.80	6.0	279	279	o.k.	**0.90**
	Bottom	5-#9	1.20	4.56	1,435	127										
47	Top	5-#11	1.20	6.62	2,055	182	70	252	0.0	4	0.80	6.0	279	279	o.k.	**0.90**
	Bottom	5-#9	1.20	4.56	1,435	127										
Level 5																
48	Top	5-#11	1.20	6.62	2,055	182	70	252	0.0	4	0.80	6.0	279	279	o.k.	**0.90**
	Bottom	5-#9	1.20	4.56	1,435	127										
49	Top	5-#11	1.20	6.62	2,055	182	70	252	0.0	4	0.80	6.0	279	279	o.k.	**0.90**
	Bottom	5-#9	1.20	4.56	1,435	127										
50	Top	5-#11	1.20	6.62	2,055	182	70	252	0.0	4	0.80	6.0	279	279	o.k.	**0.90**
	Bottom	5-#9	1.20	4.56	1,435	127										
51	Top	5-#11	1.20	6.62	2,055	182	70	252	0.0	4	0.80	6.0	279	279	o.k.	**0.90**
	Bottom	5-#9	1.20	4.56	1,435	127										
Level 6																
52	Top	4-#11		5.74	1,175	101	70	171	0.0	4	0.80	6.0	224	224	o.k.	**0.76**
	Bottom	4-#8		2.90	623	54										
53	Top	4-#11		5.74	1,175	101	70	171	0.0	4	0.80	6.0	224	224	o.k.	**0.76**
	Bottom	4-#8		2.90	623	54										
54	Top	4-#11		5.74	1,175	101	70	171	0.0	4	0.80	6.0	224	224	o.k.	**0.76**
	Bottom	4-#8		2.90	623	54										
55	Top	4-#11		5.74	1,175	101	70	171	0.0	4	0.80	6.0	224	224	o.k.	**0.76**
	Bottom	4-#8		2.90	623	54										

Table 6-8 (continued)

Level 7																
56	Top	4-#11		5.74	1,175	101	70	171	0.0	4	0.80	6.0	224	224	o.k.	**0.76**
	Top	4-#8		2.90	623	54										
57	Top	4-#11		5.74	1,175	101	70	171	0.0	4	0.80	6.0	224	224	o.k.	**0.76**
	Top	4-#8		2.90	623	54										
58	Top	4-#11		5.74	1,175	101	70	171	0.0	4	0.80	6.0	224	224	o.k.	**0.76**
	Top	4-#8		2.90	623	54										
59	Top	4-#11		5.74	1,175	101	70	171	0.0	4	0.80	6.0	224	224	o.k.	**0.76**
	Top	4-#8		2.90	623	54										
Roof																
40	Top	4-#10		4.67	974	84	48	132	0.0	4	0.80	6.0	224	224	o.k.	**0.59**
	Top	4-#8		2.90	623	54										
41	Top	4-#10		4.67	974	84	48	132	0.0	4	0.80	6.0	224	224	o.k.	**0.59**
	Top	4-#8		2.90	623	54										
42	Top	4-#10		4.67	974	84	48	132	0.0	4	0.80	6.0	224	224	o.k.	**0.59**
	Top	4-#8		2.90	623	54										
43	Top	4-#10		4.67	974	84	48	132	0.0	4	0.80	6.0	224	224	o.k.	**0.59**
	Top	4-#8		2.90	623	54										

Note:
1. DCR=demand to capacity ratio.

Check longitudinal skin reinforcement per §1910.6.7.

The code requires skin reinforcement for beams with d greater than 36 inches. This reinforcement is calculated as $A_{sk} = .012(d - 30)$ per foot depth on each side face. This reinforcement is required on the tension half of the section, and thus is required both top and bottom since seismic loads could cause tension stresses on the bottom half of the section. For a 48-inch deep beam, $d = 45$ inches:

$$A_{sk} = 0.012(45'' - 30'')(48''/12'') = 0.72\,\text{in.}^2$$

This skin reinforcement is required on each side of the beam and in each tension region a distance $d/2$ from the tension reinforcement. Thus, four quantities of this reinforcement are required. The reinforcement may be spaced a maximum distance apart of the lesser of 12 inches or $d/6$.

Therefore, use 5-#5 bars $\left(A_{sk} = 1.55\,\text{in.}^2 / 1.44\,\text{in.}^2\right)$ each side spaced $d/6 = 45\,\text{in.}/6 = 7.5\,\text{in.}$ along the side face of the beam.

Having satisfied both the design for bending and shear, the final beam designs are thus chosen as shown in Table 6-9. See Figure 6-7 for a beam cross-section showing dimensions and reinforcement.

Table 6-9. Final beam designs

Level	*Width (in.)*	*Depth (in.)*	*Long. Reinf. Top*	*Long. Reinf. Bottom*	*Skin Reinf.*	*Shear Reinf. In Hinge Regions*	*Shear Reinf. Between Hinge Regions*
Roof	24	36	4-#10	4-#6	None	4 legs #4 ties@ 6"	4 legs #4 ties@ 12"
7	24	36	4-#11	4-#7	None	4 legs #4 ties@ 6"	4 legs #4 ties@ 9"
6	24	36	4-#11	4-#7	None	4 legs #4 ties@ 6"	4 legs #4 ties@ 9"
5	30	42	5-#11	5-#9	5 - #4 ea. face	4 legs #4 ties@ 6"	4 legs #4 ties@ 8"
4	30	42	5-#11	5-#9	5 - #5 ea. face	4 legs #4 ties@ 6"	4 legs #4 ties@ 8"
3	30	52	5-#11	5-#9	5 - #6 ea. face	4 legs #4 ties@ 6"	4 legs #4 ties@ 6"
2	30	48	5-#11	5-#9	5 - #5 ea. face	4 legs #4 ties@ 6"	4 legs #4 ties@ 6"

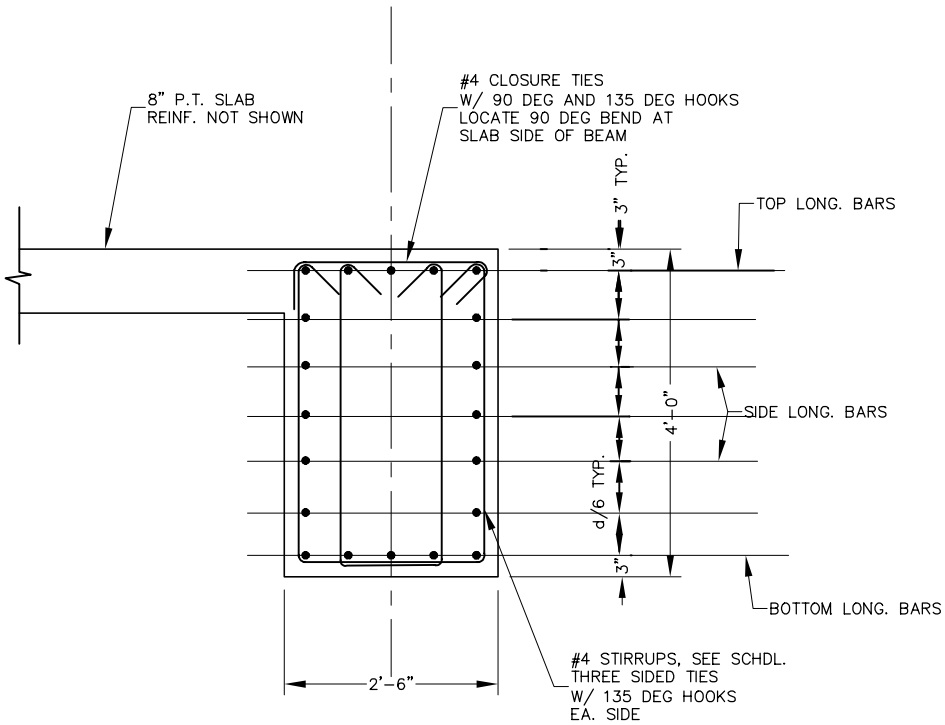

Figure 6-7. 30 x 48 beam at Level 2

6. Column design.

Columns should be designed to ensure that the plastic hinges are located in the beams (i.e., strong column-weak beam behavior) and to resist column shears. To ensure strong column-weak beam behavior, columns must be designed to have nominal bending strengths 120 percent stronger than beams per §1921.4.2.2. This is achieved by summing the M_e of columns above and below a joint and comparing that with the sum of M_g for beams on both sides of a joint.

$$\sum M_e \geq (6/5)\sum M_g \tag{21-1}$$

The controlling girder location occurs at Level 3. The girder is a 30 in. by 52 in. with 5-#11s top, 5-#9s bottom, and 5-#6s shin reinforcement each side. The assumed two skin bars are effective in calculation of M_g, or alternatively a computer program can be used for more accurate results.

Calculation of $-M_g$ (negative, at beam tops).

$$a = \frac{\left[5\left(1.56\,\text{in.}^2\right) + 4\left(0.44\,\text{in.}^2\right)\right](60{,}000\,\text{psi})}{0.85(4{,}000\,\text{psi})(30'')} = 5.62\text{ in.}$$

$$-M_g = (0.90)\left(7.80\,\text{in.}^2\right)(60{,}000\,\text{psi})\left(49'' - \frac{5.62''}{2}\right) + (0.90)\left(1.76\,\text{in.}^2\right)(60{,}000\,\text{psi})\left(37.5'' - \frac{5.62''}{2}\right)$$

$$-M_g = 22{,}752\text{ kip-in.} = 1{,}896\text{ kip-ft}$$

Calculation of M_g (positive, at beam bottoms).

$$a = \frac{\left[5\left(1.00\,\text{in.}^2\right) + 4\left(0.44\,\text{in.}^2\right)\right](60{,}000\,\text{psi})}{0.85(4{,}000\,\text{psi})(30'')} = 3.98\text{ in.}$$

$$M_g = (0.90)\left(5.00\,\text{in.}^2\right)(60{,}000\,\text{psi})\left(49'' - \frac{3.98''}{2}\right) + (0.90)\left(1.76\,\text{in.}^2\right)(60{,}000\,\text{psi})\left(37.5'' - \frac{3.98''}{2}\right)$$

$$M_g = 16{,}067\text{ kip-in.} = 1{,}339\text{ kip-ft}$$

Therefore, at interior columns:

$$\frac{6}{5}\sum M_g = \frac{6}{5}(1{,}896 \text{ kip-ft} + 1{,}339 \text{ kip-ft}) = 3{,}882 \text{ kip-ft}$$

Therefore, at end columns:

$$\frac{6}{5}\sum M_g = \frac{6}{5}(1{,}896 \text{ kip-ft}) = 2{,}275 \text{ kip-ft}$$

The girder moments are resisted by two column sections, the column above the joint and the column below the joint. The required column strengths, M_e, for interior and end columns are given below.

$$M_e = \frac{1}{2}(3{,}882 \text{ kip-ft}) = 1{,}941 \text{ kip-ft}$$

or:

$$M_e = \frac{1}{2}(2{,}275 \text{ kip-ft}) = 1{,}138 \text{ kip-ft}$$

6a. **Forces on columns due to factored load combinations.**

For column design, the load combinations of Equations (12-5) and (12-6) are used. Also, because strength design is used, the effect of the vertical seismic component E_v must be included. Equations (12-5) and (12-6) are given below. Tables 6-10 and 6-11 provide axial forces and moments on the columns of Frame A for Equations (12-5) and (12-6), respectively.

$$1.1(1.2D + 0.5L + 1.0E + 0.22D) = 1.58D + 0.55L + 1.0E_h \qquad (12\text{-}5)$$

$$1.1(0.9D - 1.0E) = 1.1(0.9D - 0.22D - 1.0E_h) = 0.75D - 1.1E_h \qquad (12\text{-}6)$$

Table 6-10. Column loads for Equation (12-5)

Member	P_u (kips)	V_u (kips)	M_u bottom (k-ft)	M_u top (k-ft)
1	145	114	1,604	-226
2	141	71	476	-374
3	148	62	505	-241
4	136	51	323	-287
5	123	39	276	-190
6	81	23	-69	-347
7	34	-21	-305	-54
8	1,001	192	2,227	-842
9	850	196	1,212	-1142
10	700	180	1,255	-903
11	553	158	942	-957
12	405	128	874	-665
13	258	88	326	-733
14	111	62	102	-642
15	1,002	185	2,142	-822
16	853	196	1,214	-1133
17	705	181	1,262	-913
18	557	160	954	-969
19	408	130	886	-670
20	260	93	346	-770
21	112	61	86	-647
22	990	195	2,259	-868
23	843	195	1,193	-1141
24	698	185	1,289	-926
25	552	162	963	-983
26	406	132	901	-680
27	259	94	346	-783
28	111	61	80	-651
29	868	140	1,719	-520
30	724	137	902	-744
31	566	127	894	-625
32	428	115	709	-675
33	290	103	668	-570
34	181	90	318	-762
35	78	55	45	-610

Table 6-11. Column loads for Equation (12-6)

Member	P_u (kips)	V_u (kips)	M_u bottom (k-ft)	M_u top (k-ft)
1	-140	122	1636	-309
2	-102	90	597	-478
3	-53	80	615	-350
4	-23	69	432	-397
5	7	57	386	-297
6	8	42	40	-464
7	4	0	-206	-207
8	441	193	2236	-849
9	374	196	1206	-1142
10	307	181	1264	-910
11	243	159	948	-964
12	178	129	882	-669
13	114	90	332	-747
14	51	62	96	-645
15	438	185	2142	-822
16	373	196	1214	-1133
17	309	181	1262	-913
18	244	160	954	-969
19	180	130	886	-670
20	115	93	346	-770
21	51	61	86	-647
22	430	194	2250	-860
23	367	195	1198	-1141
24	305	183	1279	-919
25	242	161	957	-976
26	179	131	894	-675
27	115	92	340	-769
28	50	61	86	-648
29	583	133	1686	-437
30	481	118	782	-639
31	365	108	784	-517
32	270	97	600	-566
33	174	85	557	-462
34	108	71	209	-644
35	47	34	-53	-458

6b. Design of column for bending strength.

Section 1921.4.3 requires the longitudinal reinforcement ratio of columns to be between 1 and 6 percent. Design of columns is usually performed by calculating a column axial force-moment capacity $(P-M)$ interaction diagram. The major points used to construct such a diagram are ϕP_n for compression, $(\phi P_b, \phi M_b)$ at the balance point, ϕM_n for pure moment, and ϕT_n for pure tension. The ϕ factor for column calculations is 0.70 for tied columns and 0.75 for spiral tied columns meeting requirements on §1910.9.3. In accordance with §1909.3.2.2, the ϕ factor may be increased linearly to 0.9 for columns or other axial load carrying members as ϕP_n decreases from $0.10 f'_c A_g$ (or ϕP_b whichever is less) to zero.

The equation for ϕP_n is given in §1910.3.5.

$$\phi P_n = 0.85\phi\left[0.85 f'_c \left(A_g - A_{st}\right) + f_y A_{st}\right] \tag{10-1}$$

Note that $\phi = 0.70$ for members with axial compression and flexure (not with spiral shear reinforcement) per §1909.3.2.2.

Calculation of the balance point is determined by using 0.002 strain for reinforcing steel at yield and 0.003 for concrete strain at crushing (§1910.3.2.). By summing forces and moments, the balanced axial load and moment $(\phi P_b, \phi M_b)$ can be determined. The nominal moment strength is determined by using 0.002 strain for steel yielding and by calculating tension forces and compression forces such that they add up to 0. The resulting moment is thus ϕM_n, where $\phi = 0.90$.

The equation for tension members is:

$$\phi T_n = \phi f_y A_{st}$$

Note that $\phi = 0.90$ for members with axial tension and axial tension with flexure per §1909.3.2.2.

The designer may use a commercial program such as PCACOL developed by the Portland Cement Association to develop a $P-M$ diagram for the column axial load-moment interaction, including effects for slenderness of columns. From the frame analysis for Frame A, the controlling load cases are summarized in Table 6-12.

Table 6-12. Critical column loads for Frame A

Column	*Level*	*Location*	*Size (in.)*	*Load Comb. Equation*	P_u *(kips)*	V_u *(kips)*	M_u *(k-ft)*
22	1	interior	36x44	12-5	990	195	2,258
1	1	end	42x42	12-6	-140	121	1,636

Note: See Figure 6-5 for locations of columns.

Column 22 represents the controlling load combination for a column in compression and Column 1 represents the controlling load combination for Column 22 in tension.

Using the PCACOL program, check 36×44 interior column with 18 #10 bars around perimeter. The resulting $P - M$ diagram is shown in Figure 6-8.

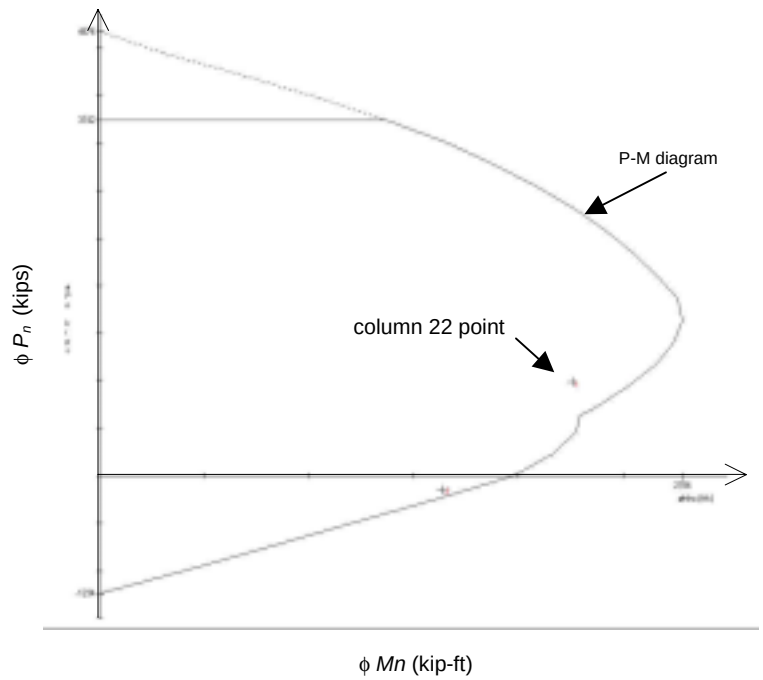

Figure 6-8. Column P-M diagram for 36 x 44-inch interior Column 22

Check 42×42 corner Column 1 with 20-#10 bars around perimeter. The resulting $P - M$ diagram is shown in Figure 6-9.

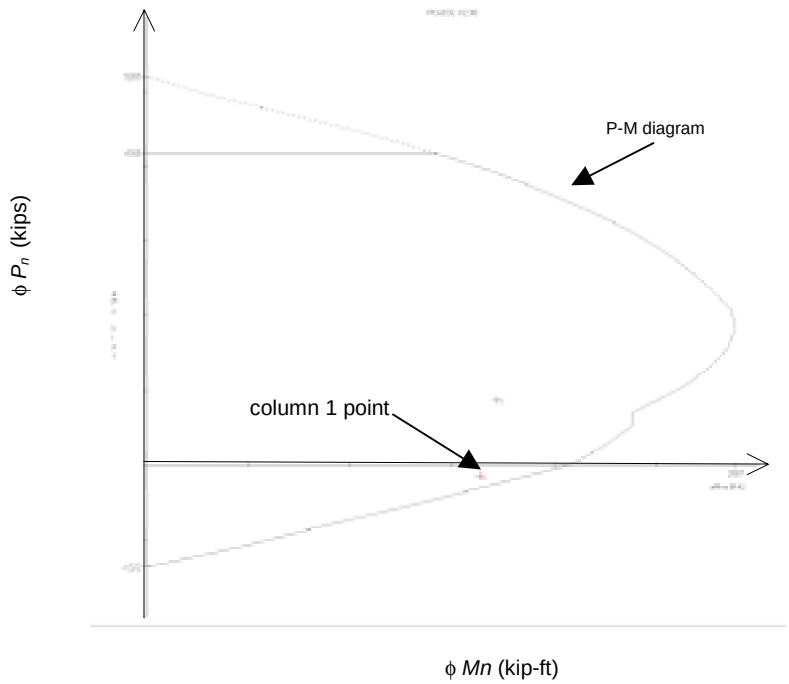

Figure 6-9. Column P-M diagram for 42-inch square Column 1

By comparing the design loads against the column $P - M$ diagrams of Figures 6-8 and 6-9, it can be seen that both columns have adequate strength. Both column sections achieve 120 percent of beam moment strength, and thus have adequate strength to develop the plastic moments of beams. ϕM_n for interior columns is approximately 2,550 kip-ft and for end columns is approximately 2,450 kip-ft at the axial load of approximately 1,000 kips.

$$\sum M_e = \frac{6}{5} \sum M$$

$$\sum M_{e,interior} = \frac{2(2{,}550 \text{ kip - ft})}{0.7} = 7{,}284 \text{ kip-ft} \geq 3{,}882 \text{ kip-ft}$$

$\therefore \quad o.k.$

$$M_{e,end} = \frac{2(2{,}450 \text{ kip - ft})}{0.7} = 7{,}000 \text{ kip-ft} \geq 2{,}275 \text{ kip-ft}$$

$\therefore \quad o.k.$

It is assumed by the code that the design of columns to be 120 percent greater in flexural strength than girders will ensure plastic hinge formation in the beams, and this is probably true in most cases. Since that is what is required in the 1997 UBC, that is what is shown in this Design Example.

Some engineers believe that they should design the columns to develop the strength of the beam plastic moments M_{pr}. While this is not explicitly required by the 1997 UBC, it is probably a good idea. The reasoning is that the yielding elements in the frame are the beam plastic moments located at beam ends followed by column plastic moments at column bases. When all nonyielding aspects of the frame are designed to be stronger than the yielding elements, the anticipated frame yield behavior is ensured. Thus, the shear design of beams, columns, and joints, column flexural strengths, and foundation elements are all designed to have adequate strengths to resist the anticipated flexural yield mechanism of the frame.

Table 6-13. Column axial and flexural design strengths

Column	*Size (in.)*	ϕP_n *at* $M = 0$ *(kips)*	ϕP_b *(kips)*	ϕM_b *(k-ft)*	ϕM_n *at* $P = 0$ *(k-ft)*
Interior	36x44	3,750	1,600	2,750	1,950
End	42x42	4,100	1,900	2,850	2,100

6c. Design of columns for shear strength.

Columns must be designed for shear strength V_e required by §1921.4.5.1 and for the special transverse reinforcement required by §1921.4.4.1. The design shear force V_e shall be determined from the consideration of the maximum forces that can be generated at the faces of the beam/column joints at the ends of beams framing into the joint. These joint forces are determined in one of three methods:

1. Using the maximum probable moment strengths, M_{pr}, of the column at the top and bottom between joints along with the associated factored axial loads on the column.

2. The column shear V_e need not exceed that determined based on the probable moment strength, M_{pr}, of the beams framing into the joint.

3. V_e shall not be less than the factored shear determined from analysis.

It is likely that the second method described above will control the shear design of the column, since strong column behavior of the frame will force plastic hinges to form in the beams. At the columns in the first story, the controlling case is from

column top moments based on M_{pr} of beams and column bottom moments based on M_{pr} of the column calculated with associated axial loads.

For the interior column, 36×44, at stories one and two, the maximum shear need be determined from maximum shear that can be transferred from beam strength, M_{pr}, as shown below.

Interior column at first story.

Clear height of column = 14 ft-0 in. – 4 ft-0 in. = 10 ft-0 in.

M_{pr} of beams framing into top of column is based on negative moment from one beam and positive moment from the other beam.

$$\sum M_{pr} = 2{,}389 \text{ kip-ft} + 1{,}708 \text{ kip-ft} = 4{,}097 \text{ kip-ft}$$

Distribution of beam moments to columns is in proportion of $4EI/L$ of columns below and above the joint. Since columns are continuous, $4EI$ is constant, and moments are distributed based on $1/L$ of columns. The lower column has height 14 ft-0 in. and the upper column has height 12ft-0 in. The lower column will have a moment determined as follows at its top:

$$M = 4{,}097 \text{ kip-ft} \left(\frac{\frac{1}{14'}}{\frac{1}{14'} + \frac{1}{12'}} \right) = 4{,}097 \text{ kip-ft} \left(\frac{12'}{26'} \right) = 1{,}890 \text{ kip-ft}$$

The lower column could develop a maximum of M_{pr} at its base. The moment M_{pr} for the column is determined with the PCA column program using a reinforcement strength of $1.25F_y$ or 75 ksi. M_{pr} determined with the PCA column for an axial load of 1,000 kips is approximately 4,000 kip-ft.

The shear V_e is determined as follows based on clear column height

$$V_e = \frac{(4{,}000 \text{ kip} - \text{ft} + 1{,}890 \text{ kip} - \text{ft})}{10'0''} = 589 \text{ kips}$$

This value is compared with frame analysis $V_u = 176$ kips, thus V_e controls.

Interior column at second story.

Clear height of column = 12 ft-0 in. – 4 ft-2 in. = 9 ft-10 in.

M_{pr} of beams framing into top and bottom of column is based on negative moment from one beam and positive moment from the other beam.

$$\sum M_{pr,above} = 2{,}769 \text{ kip-ft} + 2{,}028 \text{ kip-ft} = 4{,}797 \text{ kip-ft}$$

$$\sum M_{pr,below} = 2{,}389 \text{ kip-ft} + 1{,}708 \text{ kip-ft} = 4{,}097 \text{ kip-ft}$$

The second story column will have moments of:

$$M_{top} = 4{,}797 \text{ kip-ft} \left(\frac{12'}{24'}\right) = 2{,}399 \text{ kip-ft}$$

$$M_{bottom} = 4{,}097 \text{ kip-ft} \left(\frac{14'}{26'}\right) = 2{,}206 \text{ kip-ft}$$

$$\sum M_{col} = 2{,}399 \text{ kip-ft} + 2{,}206 \text{ kip-ft} = 4{,}605 \text{ kip-ft}$$

thus column shear V_e is determined as follows based on clear column height

$$V_e = \frac{4{,}605 \text{ kip} - \text{ft}}{7'10''} = 588 \text{ kips}$$

This value is compared with frame analysis $V_u = 195 \text{ kips}$, thus V_e controls.

The tabulated calculation of column shears is shown in Table 6-14 below.

Table 6-14. Calculation of column shear forces, V_e

Col. at Grid Lines	Level/ Story	Col. Clear Height (ft)	$-M_{pr}$ (joint above) (kip-ft)	$+M_{pr}$ (joint above) (kip-ft)	ΣM_{pr} at Joint	Dist. ΣM_{pr} to col.	M at Col. Top (kip-ft)	$-M_{pr}$ (joint below) (kip-ft)	$+M_{pr}$ (joint below) (kip-ft)	ΣM_{pr} at Joint	Dist ΣM_{pr} to col.	M at Col. Bot. (kip-ft)	ΣM (kip-ft)	V_e at Col. (kips)
1, 5	1	10	2,389	0	2,389	0.462	1,104	0	0	0	0.462	4,000	1,104	510
	2	7.83	2,769	0	2,769	0.5	1,385	2,389	0	2,389	0.538	1,285	2,670	341
	3	8.5	2,055	0	2,055	0.5	1,028	2,769	0	2,769	0.5	1,385	2,412	284
	4	8.5	2,055	0	2,055	0.5	1,028	2,055	0	2,055	0.5	1,028	2,055	242
	5	9	1,175	0	1,175	0.5	588	2,055	0	2,055	0.5	1,028	1,615	179
	6	9	1,175	0	1,175	0.5	588	1,175	0	1,175	0.5	588	1,175	131
	7	9	974	0	974	1	974	1,175	0	1,175	0.5	588	1,562	174
2,3,4	1	10	2,389	1,708	4,097	0.462	1,893	0	0	0	0.462	4,000	1,893	589
	2	7.83	2,769	2,028	4,797	0.5	2,399	2,389	1,708	4,097	0.538	2,204	4,603	588
	3	8.5	2,055	1,435	3,490	0.5	1,745	2,769	2,028	4,797	0.5	2,399	4,144	487
	4	8.5	2,055	1,435	3,490	0.5	1,745	2,055	1,435	3,490	0.5	1,745	3,490	411
	5	9	1,175	623	1,798	0.5	899	2,055	1,435	3,490	0.5	1,745	2,644	294
	6	9	1,175	623	1,798	0.5	899	1,175	623	1,798	0.5	899	1,798	200
	7	9	974	623	1,597	1	1,597	1,175	623	1,798	0.5	899	2,496	277

Special transverse reinforcement per §1921.4.4.

The total cross-section area of rectangular hoop reinforcement shall not be less than that required by Equations (21-3) and (21-4).

$$A_{sh} = 0.3\left(sh_c f'_c / f_{yh}\right)\left[\left(A_g / A_{ch}\right) - 1\right] \tag{21-3}$$

$$A_{sh} = 0.09\left(sh_c f'_c / f_{yh}\right) \tag{21-4}$$

Transverse reinforcement shall be spaced at distances not exceeding 1.) one-quarter minimum member dimension and 2.) 4 inches. The transverse reinforcement should extend beyond any joint face a distance l_o equal to the larger of: 1.) one column member depth; 2.) 1/6 of the clear column span; or 3.) 18 inches. Spacing between transverse reinforcement should not exceed 6 bar diameters of the longitudinal steel or 6 inches.

Table 6-15 below shows calculations for special transverse reinforcement.

Table 6-15. Special transverse reinforcement in columns

Col. Size	Eq.	b	d	h_c Trans	h_c Long	f'_c	f_y	A_g	A_{ch}	s	A_{sh}	No. Legs	Size Bars
36x44	(21-3)	36	44		32	4,000	60,000	1,584	1,390	4	0.357		
	(21-4)	36	44		32	4,000	60,000			4	0.768	5	#4
	(21-3)	36	44	40		4,000	60,000	1,584	1,390	4	0.446		
	(21-4)	36	44	40		4,000	60,000			4	0.96	6	#4
42x42	(21-3)	42	42		38	4,000	60,000	1,764	1,560	4	0.397		
	(21-4)	42	42		38	4,000	60,000			4	0.912	6	#4
	(21-3)	42	42	38		4,000	60,000	1,764	1,560	4	0.397		
	(21-4)	42	42	38		4,000	60,000			4	0.912	6	#4

Calculations for the required shear steel are shown in Table 6-16. The final column design at the first level is summarized in Table 6-17. The column design may be used for the full height columns or the reinforcement can be reduced slightly at the upper portion of the frame. Since the longitudinal reinforcement is only 1.44 percent, the longitudinal reinforcement cannot be reduced below 1 percent in any portion of the columns.

Table 6-16. Shear strength

Col.	Shear V_u (kips)	Shear V_e (kips)	b (in.)	d (in.)	f'_c (psi)	f_y (psi)	ϕV_c (kips)	A_v (sq. in.)	s (in.)	ϕV_s (kips)	ϕV_n (kips)	DCR
36x44	195	510	36	44	4,000	60,000	159	1.2	4	627	786	0.65
42x42	140	589	42	42	4,000	60,000	176	1.2	4	597	773	0.76

Table 6-17. Final column design at first level

Column	Longitudinal Reinforcement	Long. Stirrups Within Yielding Zones, l_o	Long. Stirrups Beyond Yielding Zones, l_o	Trans. Stirrups wWthin Yielding Zones, l_o	Trans. Stirrups Beyond Yielding Zones, l_o
36x44	18-#10	6-#4@4"	6-#4@6"	5-#4@4"	5-#4@6"
42x42	20-#10	6-#4@4"	6-#4@6"	6-#4@4"	6-#4@6"

Figures 6-10 and 6-11 show the column cross-section with dimensions and reinforcement indicated.

Note: Crossties can have 90 degree and 135 degree bends at opposite ends. 90 degree bends should be alternated with 135 degree bends at each successive tie set and at adjacent bars.

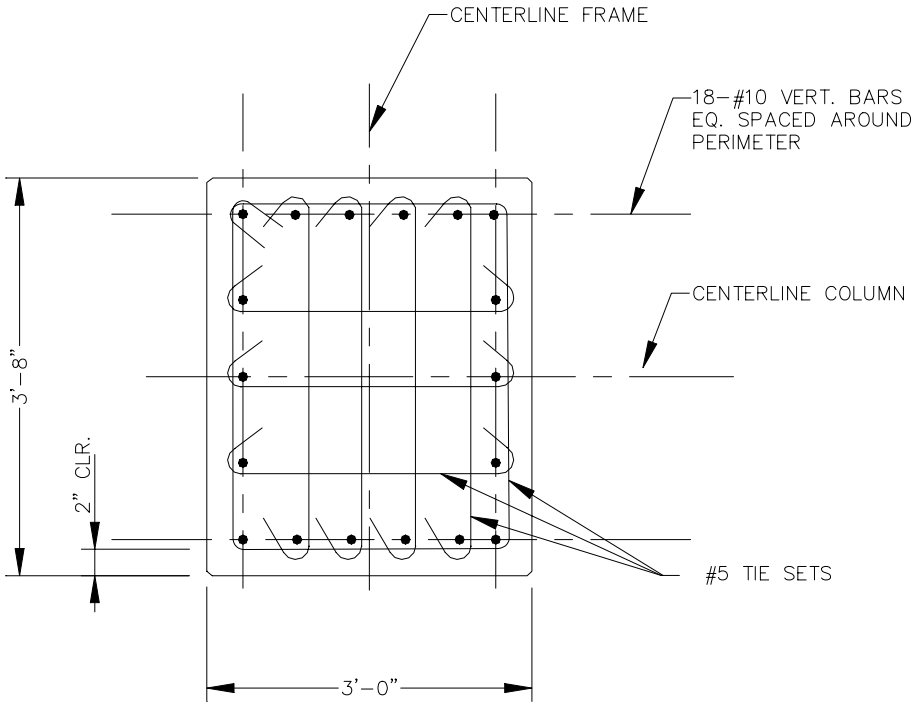

Figure 6-10. 36 x 44 column

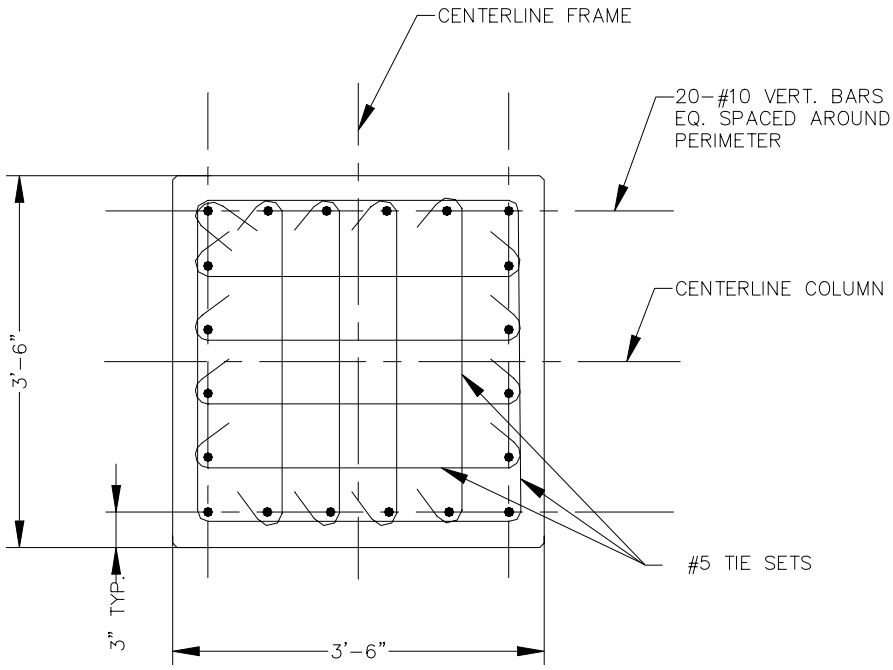

Figure 6-11. 42 x 42 column

6d. Orthogonal effects for columns. §1633.1

The code requires that columns that are part of two or more intersection lateral force resisting systems be analyzed for orthogonal effects. However, the code excepts columns where the axial force caused by seismic forces from systems in any direction is less than 20 percent of the column capacity (per §1633.1). In this Design Example, the corner columns are required to be part of both the longitudinal and transverse seismic frames. An analysis would indicate that these columns fall below the 20 percent threshold and thus do not require an orthogonal analysis.

7. Joint shear analysis.

Beam-column joints of frames must be analyzed for joint shear in accordance with §1921.5. The shear forces from analysis and the joint strength are calculated in Table 6-18.

Table 6-18. Joint shear analysis

Element	*Location*	*Shear from Analysis (kips)*	*V_{pr}, Plastic Shear (kips)*	*Nominal Shear Stress*	*A_j (in.^{2})*	*Joint Strength (kips)*	*Results*
Interior Beam	Level 3	155	253	$\phi 15\sqrt{f'_c}A_j$	1,320	1,064	*o.k.*
End Beam	Level 3	157	253	$\phi 12\sqrt{f'_c}A_j$	1,260	813	*o.k.*
Interior Column	Level 2	195	588	$\phi 15\sqrt{f'_c}A_j$	1,320	1,064	*o.k.*
End Column	Level 2	133	341	$\phi 12\sqrt{f'_c}A_j$	1,260	813	*o.k.*

8. Detailing of beams and columns.

8a. Beam reinforcement.

Beams should be detailed with top, bottom and side reinforcement as shown in Figure 6-7. In accordance with §1921.3.3, beam shear reinforcement, which meets the spacing requirements of §1921.3.3.2, should be provided over a distance 2d from the faces of columns. The tie spacing shall not exceed: 1.) $d/4$; 2.) $8d_b$ of minimum beam longitudinal bar diameters; 3.) $24d_b$ of stirrup bars; and 4.) 12 inches. These requirements result in a 9-inch maximum tie spacing. However, from analysis, ties required are #5 ties spaced at 6-inch centers. For ties between beam hinge regions, ties are required at $d/2$ spacing. However, based on analysis # 5

ties at 9-inch spacing are adequate across the remaining length of the beam (outside the hinge areas at each end).

Longitudinal beam bars should be spliced away from the beam-column joints and a minimum distance of $2h$ from the face of the columns, per §1921.3.2.3. At the Level 2 beams for this Design Example, the beam clear spans are approximately 26 ft and $2h$ is 2(46") = 7 ft-8 in. The designer might consider splicing beam longitudinal reinforcement at the quarter-, third-, or half-span locations. In this case, the quarter-span locations would not be away from hinge regions. However, the one-third, or mid-span, locations would also be okay. Increased shear reinforcement is required at the lap splice locations per §1921.3.2.3. The maximum spacing of ties in these regions shall not exceed $d/4$ or 4 inches. In this case, the beam mid-point is the best place to locate the lap splices, which for the #11 top bars at Class B splices would have a splice length of 110 inches or 7 ft-2 in. The lap splice length for #9 bottom bars at a Class B lap splice is 69 inches or 5 ft-9 in. Longitudinal reinforcement can be shipped in 60 ft-0 in. lengths on trucks, thus two locations of longitudinal beam lap splices would be required in the frame along Line A, conceivably on the two interior spans.

8b. Column reinforcement.

Column splices should occur at column mid-story heights (or within the center half of the column heights) per §1921.4.3.2. Special transverse reinforcement is required per §1921.4.4 over a length l_o above and below beams at spacing not greater than: 1.) the column depth; 2.) one-sixth the column clear span; or 3.) a maximum of 18 inches. For this Design Example the column depth would control which is either 42 inches or 44 inches depending on the column. For column sections between the locations where special transverse reinforcement is required, the spacing requirements of §1907.10.5.2 apply where ties should be spaced a maximum of 16 longitudinal bar diameters, 48 tie bar diameters or the least dimension of the column. This would require ties at 20 inches; however for this Design Example, it is recommended not to space column tie bars greater than 6 inches per §1921.4.4.6 and 4 inches at lap splices.

9. Foundation considerations.

The foundation system should be capable of resisting column base moments sufficient to cause plastic hinges to be located in the beams and column bases. If the plastic hinge location is forced into the columns, the foundation elements need not be designed for yielding or ductility. The foundation should also be adequate to keep soil pressures within allowable values and adequate for frame overturning stability. For this analysis, a 60-inch wide by 48-inch deep grade beam was used and cracked beam properties were used in the computer analysis (Figures 6-12 through 6-16). Note that ASD combinations of loads are used for calculation of soil pressures. The actual design of foundation elements is not performed in this Design Example.

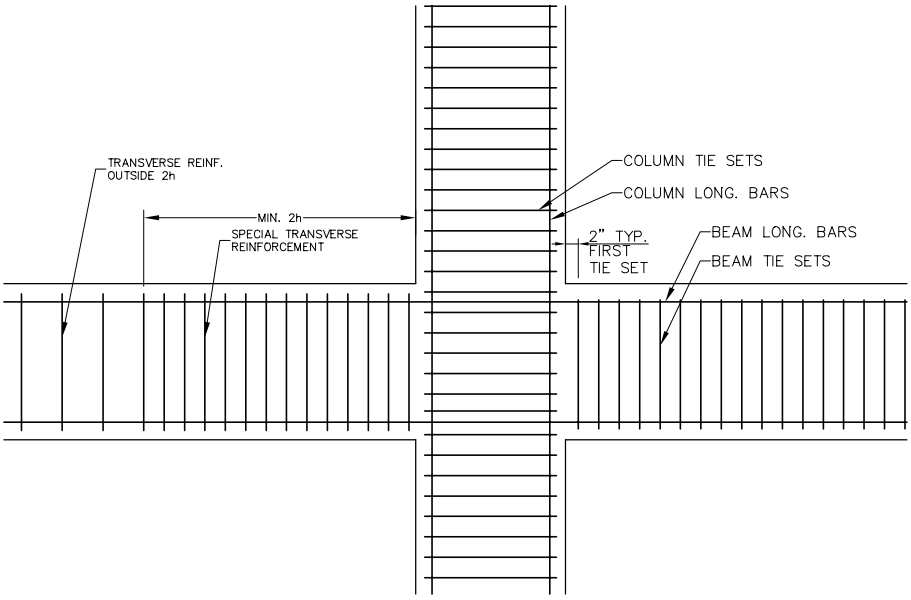

Figure 6-12. Beam-column joint

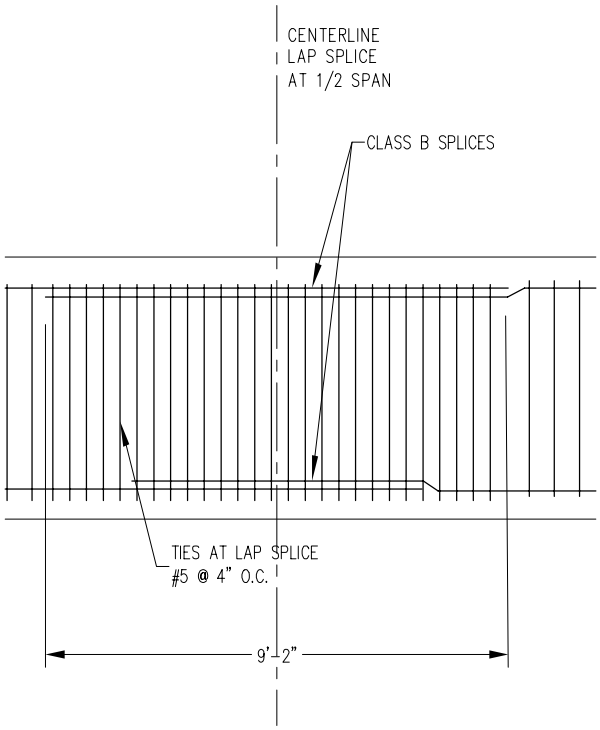

Figure 6-13. Beam reinforcement lap splice

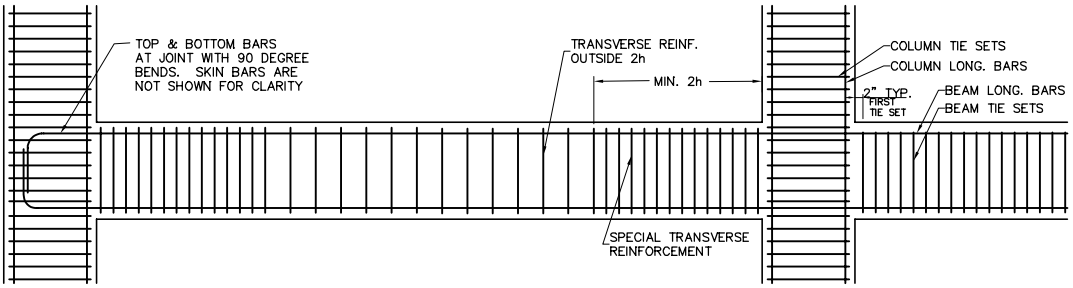

Figure 6-14. Beam-column joint reinforcement at exterior span

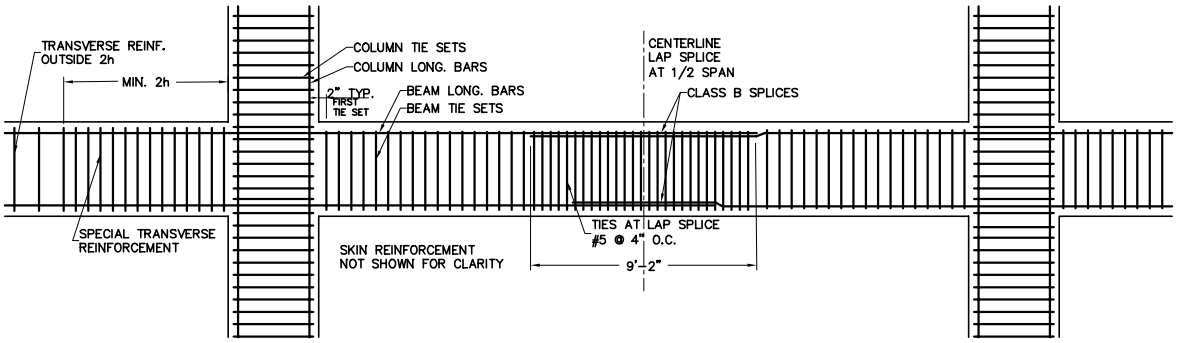

Figure 6-15. Beam reinforcement at interior spans

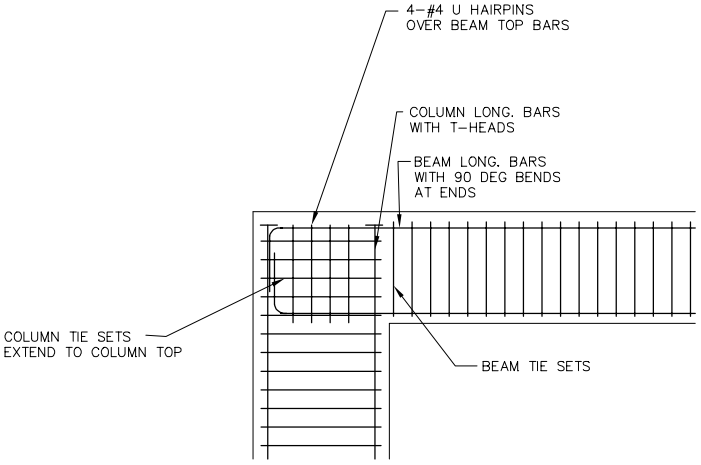

Figure 6-16. Beam column corner joint at roof

Commentary

Deformation compatibility should be checked at interior columns due to seismic drifts Δ_M . This will lead to a conservative design for punching shear at slab/column joints. These joints may require drop panels or shear head reinforcement in the slab over interior columns.

The building period in this Design Example was calculated using Method A. Method B could be used as long as the resulting period was not more than 130 percent of the Method A period (in Seismic Zone 4) or 140 percent of the Method A period (in Seismic Zones 1, 2, and 3). If Method B is used to determine the period, the designer should keep in mind that nonseismic elements can cause stiffness in the building and thus cause a decrease to the Method B period determination. Thus, interior nonseismic columns or other important stiffening elements should be included in Method B period calculations to ensure conservative period calculation results.

Reinforced concrete SMRF frames can provide very ductile seismic systems for buildings with highly desirable performance characteristics. The yielding mechanisms can be predicted and the seismic performance will be ductile and not brittle. Care should be taken to ensure adequate shear strength at beams, columns, and joints, so that ductile flexural yielding will occur as anticipated. Care should also be taken with lap splices and detailing of reinforcement and with specified couplers. Reinforcement should be ASTM-A706, which has more ductile performance characteristics that ASTM-A615 reinforcement.

References

A. H. Nilson and G. Winter, 1986. *Design of Concrete Structures*, Tenth Edition. McGraw-Hill, New York.

ATC-40, 1996. *Seismic Evaluation and Retrofit of Concrete Buildings*. Applied Technology Council, Redwood City, California.

J. C. McCormac, *Design of Reinforced Concrete*. Third Edition. Harper-Collins, New York.

J. G. MacGregor, 1992. *Reinforced Concrete Mechanics and Design*, Second Edition. Prentice Hall, New Jersey.

R. Park and T. Paulay, 1975. *Reinforced Concrete Structures*. John Wiley and Sons, New York.

Paulay, T. and Priestley, N.J., 1992. *Seismic Design of Reinforced Concrete and Masonry Buildings*. John Wiley and Sons, New York.

Design Example 7
Precast Concrete Cladding

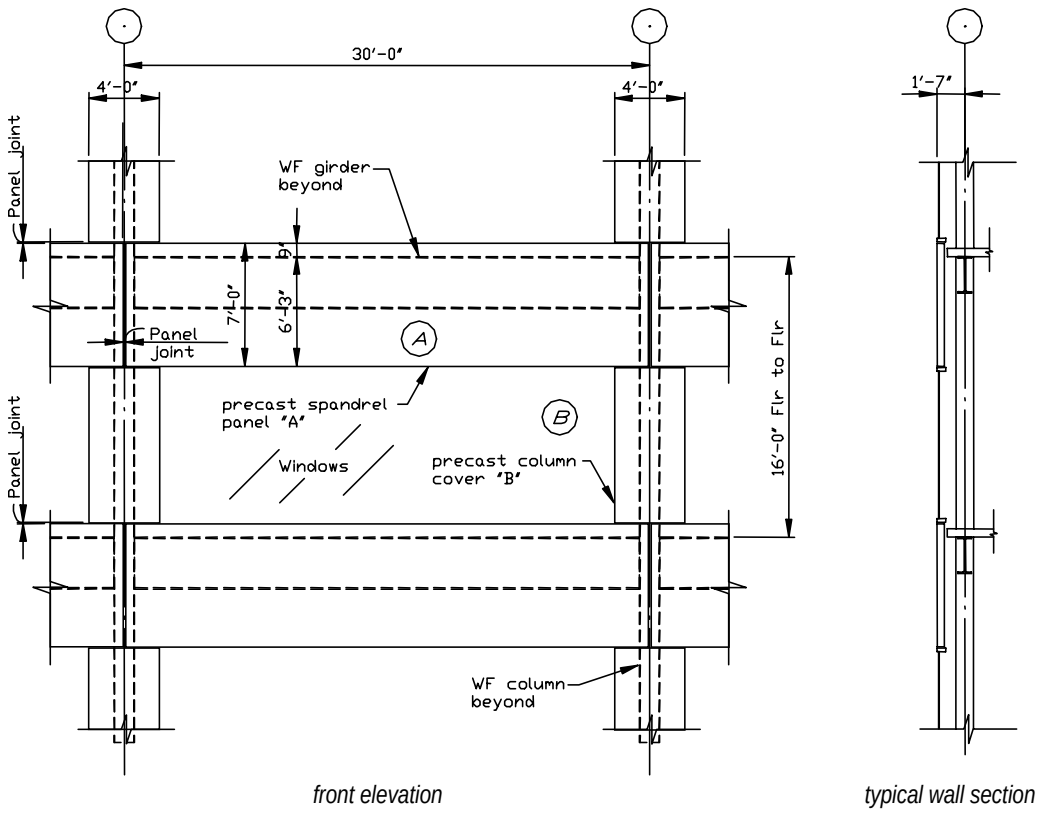

Figure 7-1. Typical precast concrete panel elevation

Overview

This Design Example illustrates the seismic design of precast concrete cladding Panels A and B shown in the partial wall elevation of Figure 7-1. This cladding example is for a 4-story steel moment frame structure located in Seismic Zone 4. The architect has chosen precast concrete panels for the façade.

Current standard practice is to specify that the fabricator perform the design for the panel and connections. The structural Engineer of Record for the building typically reviews the fabricator's design for compliance with the project design

specifications, and for compatibility with the structural framing. It is important that the structural Engineer of Record understand that panel loads are concentrated at discrete points to the structure. These points of attachment will usually require additional support steel to reach the panel connection hardware. These supports will typically induce eccentric loads into the beams and columns that must be accounted for in design of the structure. Wind loads will also be considered in this example, since some elements of the connection and panel reinforcing may be controlled by wind, while seismic forces may control other parts.

Earthquake-damaged cladding can become a severe falling hazard, particularly damaged cladding on highrise buildings in congested urban areas. Cladding is typically connected at a few discrete points, which limit the redundancy of the system. For this reason, code seismic requirements for the "attachment" of cladding require a more conservative design than other building components. Building cladding is also required to resist realistic story drifts without failure through flexible connections and adequate panel joints. These requirements are detailed in §1633.2.4.2 and will be illustrated in this Design Example.

This Design Example provides an overview of the design procedure for precast concrete cladding panels and their connections to the structure.

Outline

This Design Example illustrates the following parts of the design process:

1. **Governing loading conditions and forces.**
2. **Selection of panel thickness.**
3. **Selection of the panel connection scheme.**
4. **Panel reinforcing design.**
5. **Connection forces.**
6. **Typical connection design.**
7. **Panel joint widths to accommodate drift.**
8. **Typical connection details.**

Given Information

Exterior wall system weight:
- Precast concrete panel (5″ thickness) = 62.5 psf
- Window system = 10 psf
- Metal stud and gypsum board, 5 psf

Wind design data:
- Basic wind speed = 70 mph
- Wind exposure = *C*
- Importance factor, I_w = 1.0

Seismic design data:
- Occupancy category: standard occupancy structure
- Seismic importance factor, I_p = 1.0
- Soil profile type: stiff soil type S_D (default profile)
- Seismic zone 4, Z=0.4
- Near-source factors:
  - Seismic source type A
  - Distance to seismic source, 7 km
  - Maximum inelastic response displacement, Δ_M = 3.2 in.

Building design data:
- Building mean roof height = 64 ft
- Top of parapet = elevation 66 ft 6 in.
- Building plan dimensions = 150 ft x 70 ft

Material specifications:
- Concrete:
  - Compressive strength f'_c = 4,000 psi, ASTM C39
  - Aggregates, ASTM C33
  - Portland Cement, ASTM C150
  - Admixtures, ASTM C494
  - Unit weight 150 pcf, ASTM C138
- Steel:
  - Structural shapes, plates and bars F_y = 36 ksi, ASTM A36
  - Hollow structural section: round F_y = 33 ksi, ASTM A53, Grade B
  - Hollow structural section: rectangular F_y = 46 ksi, ASTM A500, Grade B
  - Welded Reinforcing steel f_y = 60 ksi, ASTM A706
  - Non-welded reinforcing steel f_y= 60 ksi, ASTM A615, Grade 60
  - Coil rods, ASTM A108
  - Weld electrodes:
    - Shielded metal arc welding F_{EXX} = 70 ksi, AWS A5.1 E70XX
    - Flux-cored arc welding F_{EXX} = 70 ksi, AWS A5.20 E7XT

Calculations and Discussion	Code Reference

1. **Governing loading conditions and forces.** **§1605.1**

Cladding panels must be designed to resist both vertical loads and lateral forces. Typically the vertical loads consist of the panel weight and the weight of any windows or other miscellaneous architectural items attached to the panel. Normally, two bearings points are provided and the panel is treated as a simply supported beam for vertical loads. The lateral forces consist of both wind and seismic effects. Wind forces are included in this Design Example because they are an integral part of the design process for cladding and to illustrate the application of load combinations for all the loading cases.

Where structural effects of creep, shrinkage, and temperature change may be significant in the design, they shall be included in the load combinations. §1909.2.7

1a. **Design wind pressures.** **Chapter 16, Division III**

Wind pressures are determined from Equation (20-1) using the 70 mph basic wind speed. This process is shown below.

$$P = C_e\, C_q\, q_s\, I_w \qquad (20\text{-}1)$$

$q_s = 12.6$ psf Table 16-F

h = mean roof height = 64 ft

Interpolation is used to determine the combined height and exposure factor C_e. Table 16-G

Interpolation for h = 64 ft (mean roof height).

$$C_e = (1.53 - 1.43)\frac{(64-60)}{(80-60)} + 1.43 = 1.45$$

Interpolation for h = 66.5 ft (top of parapet).

$$C_e = (1.53 - 1.43)\frac{(66.5-60)}{(80-60)} + 1.43 = 1.46$$

The pressure coefficients for the exterior elements are given in Table 16-H. The resulting pressures are summarized in Table 7-1 below.

Table 7-1. Design wind pressures

Element	*Direction*	*Cq*	*p (psf)*
Typical panel and connection	In	1.2	21.92
Typical panel & connection	Out	1.2	21.92
Corner panel & connection	Out	1.5	27.41
Corner panel & connection	In	1.2	21.92
Parapet panel & connection	In/out	1.3	23.91

Note: The inward pressure may be calculated for the actual height of that element; however, the outward pressure is based on the mean roof height and is considered to be constant along the height of the building. For simplicity the inward pressure is calculated using the mean roof height. The outward corner pressure may be reduced based on the actual tributary area being considered . Since seismic forces will usually govern the connection design for precast panels, this reduction has not been applied in Table 7-1.

1b. Design seismic forces. §1632

Seismic forces for elements of structures, such as the precast panels of this example, are specified in §1632. These are summarized below.

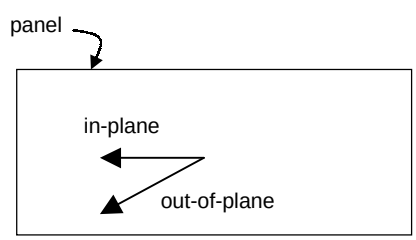

Figure 7-2. In-plane and out-of-plane force on panel

The basic equation is:

$$F_p = 4.0\ C_a\ I_p\ W_p \tag{32-1}$$

This represents an upper bound of element force levels and is seldom used.

The alternate equation, more frequently used is:

$$F_p = \frac{a_p C_a I_p}{R_p}\left(1 + 3\frac{h_x}{h_r}\right)W_p \tag{32-2}$$

Limits are set on Equation (32-2) such that F_p shall not be less than 0.7 $C_a I_p W_p$ and need not be more than 4 $C_a I_p W_p$. (32-3)

Typically the alternate Equation (32-2) is used since the results for panel and body loads will be more in line with the previous code force levels.

Pertinent values for a_p and R_p , taken from Table 16-O, are given below in Table 7-2.

Table 7- 2, Horizontal Force Factors, a_p and R_p

Wall Elements of Structure	a_p	R_p
Unbraced (cantilevered) parapets	2.5	3.0
Exterior walls at or above the ground level	1.0	3.0
All interior bearing and nonbearing walls	1.0	3.0

The structural Engineer of Record must specify the near-source factor and distance to the fault zone. In many cases the seismic coefficient C_a is specified, but for this example we will start with N_a and the fault distance.

The seismic coefficient C_a is found from Table 16-Q.

For seismic zone 4 and soil profile type S_d

$C_a = 0.44\ N_a$ Table 16-Q

Since the distance to the source is 7 km and the source is type *A*, N_a is found by interpolation as permitted by Table 16-S.

$$N_a = \frac{(1.2-1)}{(10-5)}(10-7)+1.0 = 1.12$$

$C_a = 0.44\ (1.12) = 0.493$

The maximum, minimum, and the value at height h_x of F_p are:

Maximum $F_p = 4.0\ (0.493)\ (1.0)\ W_p = 1.97\ W_p$

Minimum $F_p = 0.7\ (0.493)\ (1.0)\ W_p = 0.345\ W_p$

At h_x:

$$F_p = \frac{(1.0)(0.493)(1.0)}{3.0}\left(1 + 3\frac{h_x}{64}\right) = 0.164\left(1 + \frac{h_x}{21.33}\right)$$

Additional requirements for exterior elements are given in §1633.2.4.2. These apply to the "attachments" of the panel to the structure.

For the body of the connection system:

$a_p = 1.0 \quad R_p = 3.0$

For the fasteners of the connection system:

$a_p = 1.0 \quad R_p = 1.0$

Table 7-3 below summarizes the seismic coefficients, which multiplied by the tributary weight W_p, are used to determine the design lateral force F_p. Note that the seismic coefficients for the fasteners are substantially higher than those for the panel or the body of the connection. Use of these is illustrated later in this example.

Table 7-3. Seismic coefficients

Level	hx/hr	F_p (panel)	F_p (body)	F_p (fastener)
0	0.00	0.345	0.345	0.493
1	0.25	0.345	0.345	0.862
2	0.50	0.411	0.411	1.232
3	0.75	0.534	0.534	1.602
4	1.00	0.657	0.657	1.970
Parapet	1.00	1.643	1.643	1.970

Note: When the difference in elevation of connections becomes significant, the current interpretation of the code requires a calculation of F_p at each level of connections for the area of panel tributary to those connections. Examples are full story wall panels where the bottom connections are made to one floor while the top connections are made to the floor above.

In this Design Example, the floor elevation where the upper connections are attached was used to calculate F_p. For out-of-plane forces, this is conservative since the other connections are below this point. For in-plane forces this would follow the current interpretation since all primary reactions occur at this level.

2. Selection of panel thickness.

In general the final precast design begins with the panel thickness as a fixed dimension and the connection system is developed from that point forward. The panel thickness is a decision that must be made early in the design process by the architect. Consultation with a precast manufacturer is recommended to help with shipping and handling considerations. Any changes to the panel thickness after the project has proceeded can have significant impact on other portions of work.

There are many factors to consider when deciding on a panel thickness. Some of these are listed below:

Architectural considerations:
- Fire resistance
- Thermal insulation
- Sound insulation
- Weather resistance

Structural considerations:
- Total weight of exterior elements
- Weight supported by exterior beams and columns
- Deflection and cracking

Fabrication and installation:
- Minimum weight for handling, shipping and erection
- Adequate thickness for efficient handling
- Adequate stiffness for an efficient connection scheme

For this project, the panels are specified to be 5 inches thick. This thickness provides adequate anchorage depth for the connection hardware and also allows the panel to be handled easily. Another consideration is the warping and bowing that may occur during curing. Thin long panels will bow or warp more than thick short panels.

3. Selection of panel connection scheme.

The primary goal in developing a connection system is to minimize the number of connections and provide connections that have adequate tolerance with the structural frame.

For this example we will try 4 connections first as shown in Figure 7-3. Because of the moment frame structural system, the bearing connection must either be located off of the column or on the beam away from any potential hinge location. In this case we will assume a support is provided off of the column so that the bearing connections will be close to the end of the panel.

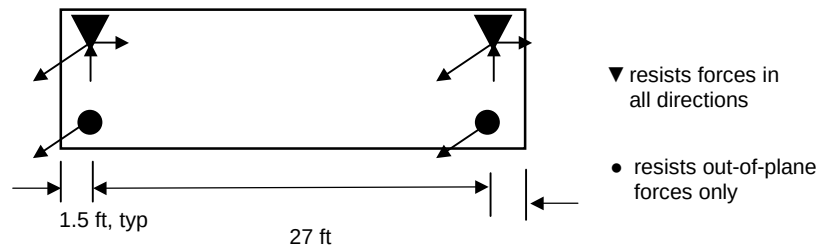

Figure 7-3. Initial connection scheme for Panel A

Compare wind loading versus seismic loading.

The tributary height is 16 ft because the precast panels transfer wind load on both the glazing and panels to the structure.

Total uniform wind loading on panel.

$$p_w = 21.92 \text{ psf } (16 \text{ ft}) = 351 \text{ plf}$$

Assume the panel under consideration is located on Level 3. The working level load for the seismic forces is:

$$p_s = \frac{F_p}{1.4} w_p = \frac{0.534}{1.4}\left[(62.5\,\text{psf})(7\,\text{ft}) + (10\,\text{psf})(9\,\text{ft})\right] = 201.1\,\text{plf}$$

Therefore, wind controls for panel design. This is typical for a spandrel panel.

Check panel moment at mid-span.

$$M = 0.351 \text{ klf } (27^2/8 - 1.5^2/2) = 31.5 \text{ k-ft}$$

$$S_y = (84 \text{ in.})(5 \text{ in.})^2 / 6 = 350 \text{ in.}^3$$

$$f_{by} = M_y / Sy = 1.08 \text{ ksi}$$

The modulus of rupture for concrete is

$$f_r = 7.5\sqrt{f_c'} = 7.5\sqrt{4000} = 474 \text{ psi} \qquad (9\text{-}9)$$

This panel stress is well above the modulus of rupture and the panel will not satisfy the deflection criteria because of the reduced moment of inertia from cracking (§1909.5.2.3).

Although the code does not specifically address out-of -plane deflection of cladding panels, some guidance can be found in Table 16A-W of the 1998 California Building Code. Typically, the deflection is limited to *L*/240 because of the other elements that are attached. Also, in order to satisfy the crack control criteria of the code (See §1910.6.4), large amounts of reinforcing may be required. Consequently, connections will be provided at mid-span to reduce the panel stresses and deflections.

4. Panel design.

Wind controls the panel design and bending moments are determined using the load combination of Equation (12-6). Note that the 1.1 multiplier of Exception 2 of §1612.2.1 is not applied for wind.

Wind:

$$M_f = p_w \frac{l^2}{8} = 8.0 \text{ k-ft} \quad \text{where } l = \frac{27'}{2} = 13.5'$$

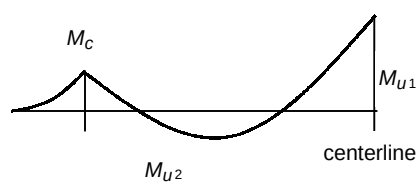

$$M_c = p_w \frac{a^2}{2} = 0.39 \text{ k-ft} \quad \text{where } a = 1.5'$$

$$M_{u1} = 1.3\left(M_f - \frac{1}{2}M_c\right) = 10.14 \text{ k-ft, moment over middle support}$$

$$M_{u2} \approx 1.3\left[M_f - \frac{1}{2}\left(\frac{M_{u1}}{1.3} + M_c\right)\right] = 5.07 \text{ k-ft, approx. moment between supports}$$

Determine reinforcing required for strength.

Consider a one-foot width:

M_u = 10.14 k-ft / 7 ft = 1.45 k-ft

$$b = 12'' \qquad d = 2''$$

$$\phi M_n = \phi A_s f_y \left(d - \frac{a}{2}\right)$$

$$a = \frac{A_s f_y}{0.85 f_c' b}$$

Solving directly for A_s leads to 0.17 in.^{2}/ft.

Minimum reinforcement required for walls. **§1914.3.3**

For deformed bars not larger than #5 with $f_y \geq 60{,}000$ $A_s / b_h = 0.0020$

$$A_{s,min} = 0.002(12'')(5'') = 0.12\,\text{in.}^2/\text{ft} < A_s, \text{ as required}$$

Flexural minimum steel requirements: §1910.5

$$A_{s,min} = \frac{3\sqrt{f_c'}}{f_y} b_w d = \frac{3\sqrt{4000}}{60{,}000}(12'')(2'') = 0.076\,\text{in.}^2/\text{ft} \qquad (10\text{-}3)$$

But not less than:

$$\frac{200 b_w d}{f_y} = \frac{200(12'')(2'')}{60{,}000} = 0.08\,\text{in.}^2/\text{ft}$$

The ratio of reinforcement ρ provided shall not exceed 0.75 of the ratio ρ_b that would produce balanced strain conditions for the section.

$$\rho_b = \left(\frac{0.85\beta_1 f_c'}{f_y}\right)\left(\frac{87{,}000}{87{,}000 + f_y}\right) = \left(\frac{0.85(0.85)(4)}{60}\right)\left(\frac{87{,}000}{87{,}000 + 60{,}000}\right) = 0.0285 \qquad (8\text{-}1)$$

$$A_{s,max} = 0.75\rho_b b_w d = 0.75(0.0285)(12'')(2'') = 0.51\ \text{in.}^2/\text{ft}$$

Use #4 at 12 inch o.c., $A_s = 0.20$ in.^{2} /ft

Check crack control requirements. **§1910.6.4**

Consider a one-foot-wide strip at the bottom of the panel.

$$S_y = \frac{bh^2}{6} = \frac{12(5)^2}{6} = 50.0\,\text{in.}^3$$

$$M_{wind} = \frac{7.8\,\text{k} - \text{ft}}{7'} = 1.1\,\text{k-ft/ft}$$

$$f_{by} = \frac{M_{wind}}{S_y} = \frac{1.11(12'')}{50.0} = 0.267\,\text{ksi}$$

$$S_x = \frac{hb^2}{6} = \frac{5(84)^2}{6} = 5{,}880\,\text{in.}^3$$

Neglect small cantilever at the ends.

$$M_{DL} = \frac{0.528\,\text{klf}(27')^2}{8} = 48.1\,\text{k-ft}$$

$$f_{bx} = \frac{M_{DL}}{S_x} = \frac{48.1(12'')}{5{,}880} = 0.098\,\text{ksi}$$

$$f_{tot} = f_{by} + f_{bx} = 0.36\,\text{ksi} < f_r = 0.474\,\text{ksi}$$

Therefore, there is no cracking under service loads, and the crack control requirements of §1910.6.4 are not applicable.

The maximum deflection under service wind loading is:

$$\Delta = 0.03'' < \frac{L}{240} = \frac{13.5'(12)}{240} = 0.675'' \qquad o.k.$$

Deflection is *o.k.*

5. Connection forces.

In this part, connection forces will be determined. Seismic forces are determined for a 1g loading. These will then be appropriately scaled in Part 6. The distribution factors used to determine reactions at the various supports were determined from a generic moment distribution. For brevity, that analysis is not shown here.

Element weights:

Panel A	W_{pa} = 62.5 psf (7ft) (30 ft)	= 13.13 k	x = 15 ft	z = .208 ft
Column cover B	W_{pb} = 62.5 psf (4 ft/2) (9 ft)	= 1.125 k	x = 1 ft	z = .208 ft
Column cover B	W_{pb} = 62.5 psf (4 ft/2) (9 ft)	= 1.125 k	x = 29 ft	z = .208 ft
Window	W_w =10.0 pst (9 ft) (26 ft)	= 2.34 k	x = 15 ft	z = .10 ft
Total	W_{tot} =	= 17.72 k	x = 15 ft	z = .19 ft

Gravity.

For gravity loads, the panel is treated as a simply supported beam using two bearing connections to support the vertical load. Since the vertical support reaction does not line up with the center of gravity in the *z*-direction, additional reactions are necessary in the z-direction to maintain equilibrium, as shown in Figure 7-4.

e_z = 0.33 ft (distance from the back of the panel to the center of the bearing bolt)

R_{1y} = 17.72/2 = 8.86 k

R_{1z} = 8.86 (0.19 + 0.33)/5.25 = .88 k

R_{3z} = -R_{1z}

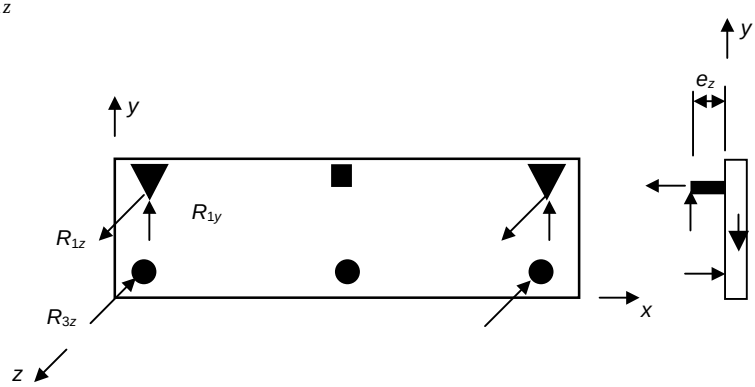

Figure 7-4. Gravity load reactions

Seismic out-of-plane (1g).

Connection distribution factors for a uniform load applied to a symmetric two span continuous beam with cantilevers at the ends are shown below and are used to distribute the uniform panel weight applied transverse to the panel. These can be found by moment distribution or other suitable means of continuous beam analysis.

$DF_e = 0.223$ (fraction of total load resisted by outside support)

$DF_m = 0.554$ (fraction of total load resisted by mid-span support)

Connection distribution factors for a uniform load applied to a symmetric two span continuous beam without cantilevers at the end are given below. These will be used to distribute the uniform window load to the connections.

$DF_e = 0.1875$ (fraction of total load resisted by exterior support)

$DF_m = 0.625$ (fraction of total load resisted by middle support)

The total reactions (Figure 7-5) are as follows:

$$R_{1z} = [(0.223)(13.13\,\text{kips}) + (0.1875)(2.34\,\text{kips}) + 1.125](2.5'/5.25') = 2.19\,\text{kips}$$

$$R_{3z} = [(0.223)(13.13\,\text{kips}) + (0.1875)(2.34\,\text{kips}) + 1.125](2.75'/5.25') = 2.35\,\text{kips}$$

$$R_{5z} = [(0.554)(13.13\,\text{kips}) + (0.625)(2.34\,\text{kips})](2.5'/5.25') = 4.16\,\text{kips}$$

$$R_{6z} = [(0.554)(13.13\,\text{kips}) + (0.625)(2.34\,\text{kips})](2.75'/5.25') = 4.58\,\text{kips}$$

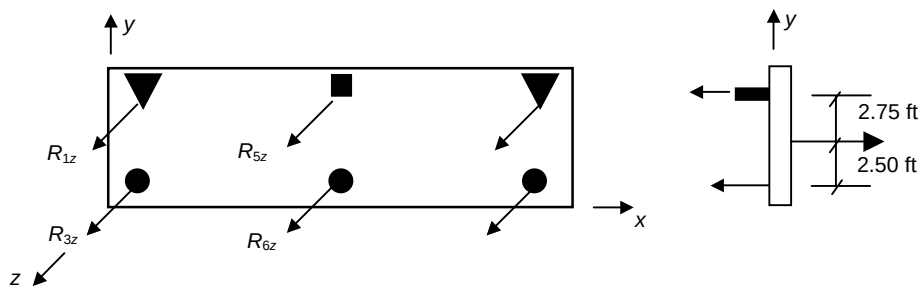

Figure 7-5. Seismic out-of-plane reactions

Seismic in-plane (1g)

In-plane seismic forces (Figure 7-6) are typically resisted by connections at the level the panel is supported. Overturning forces are resisted by vertical reactions at the supports.

e_l = 0.50 ft

R_{1x} = 17.72/3 = 5.91 k

R_{1y} = 17.72 k (2.75'/27') = 1.80 k

R_{1z} = 1.80 k (.19 +.33)/5.25' + 17.72 k (.19 + .5)/27' = 0.63 k

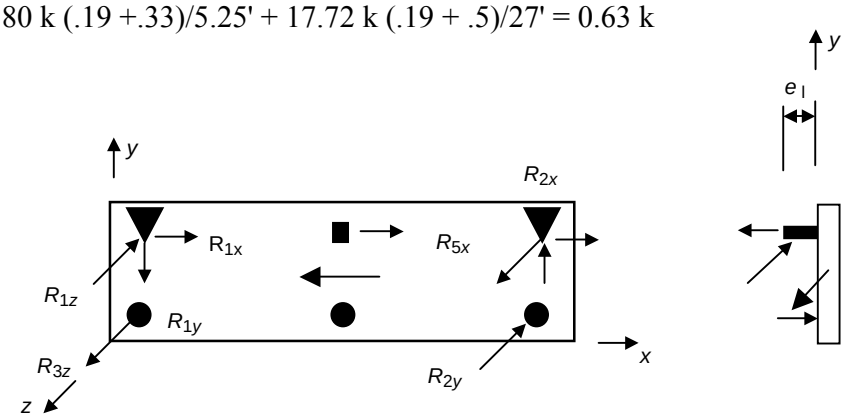

Figure 7- 6. Seismic in-plane reactions

Wind loading.

The distribution of total load is similar as was done for seismic out-of-plane forces (Figure 7-5).

P_w = 21.92 psf (16')(30') = 10.52 k

R_{1z} = [(0.223)(10.52 k)](2.5'/5.25') = 1.12 k

R_{3z} = [(0.223)(10.52 k)](2.75'/5.25') = 1.23 k

R_{5z} = [(0.554)(10.52 k)](2.5'/5.25') = 2.78 k

R_{6z} = [(0.554)(10.52 k)](2.75'/5.25') = 3.05 k

6. Connection design.

Design of the bearing connection will be done using strength design for both concrete and steel elements of the connection. This is illustrated in the parts below.

6a. Application of load factors.

The basic load combinations are defined in §1612.2.1. Normally there are no floor live loads, roof live loads, or snow loads on cladding panels. The load combinations of Equations (12-1) through (12-6) reduce to the following. Parts of the load combinations not used have a strike line through them.

$$1.4D \tag{12-1}$$

$$1.2D + \cancel{1.6L} + \cancel{0.5(L_r \text{ or } S)} \tag{12-2}$$

$$1.2D + \cancel{1.6\,(L_r \text{ or } S)} + \cancel{(f_1 L \text{ or } 0.8W)} \tag{12-3}$$

$$1.2D + 1.3W + \cancel{f_1 L} + \cancel{0.5\,(L_r \text{ or } S)} \tag{12-4}$$

$$1.2D + 1.0E + \cancel{(f_1 L + f_2 S)} \tag{12-5}$$

$$0.9D \pm (1.0E \text{ or } 1.3W) \tag{12-6}$$

For concrete design, Exception 1 to §1612.2.1 applies for combinations that include seismic forces. For all other combinations, Exception 2 refers to §1909.2. These equations reduce to the following:

$$1.4D + \cancel{1.7L} \qquad (9\text{-}1)$$

$$0.75\,(1.4D + \cancel{1.7L} + 1.7\,W) \qquad (9\text{-}2)$$

$$0.9D \pm 1.3\,W \qquad (9\text{-}3)$$

$$1.1(1.2D + 1.0E) \qquad (12\text{-}5)$$

$$1.1\,(0.9D \pm 1.0E) \qquad (12\text{-}6)$$

For concrete anchors, additional load factors can be found in §1923.2. A load factor of 1.3 is normally applied for panel anchorage when special inspection is provided. When special inspection is not provided, a factor of 2 is applied. In addition, when anchors are embedded in the tension zone of a member, an anchor factor of 2 is required for special inspection and an anchor factor of 3 is required for no special inspection. These factors are *not* considered applicable to cladding panels, since the connector load is already raised significantly for nonductile portions of the connector.

It should be noted that §1632.2 requires the design of shallow anchors to be based on forces using a response modification factor, R_p , of 1.5. Most embedded anchors in panels fall within the shallow anchor criteria. Since the fastener force is based on an R_p equal to 1.0, the shallow anchor requirement is superceded by the more stringent fastener force requirement.

The total seismic force is defined as follows, where F_p is used for E_h and E_v is defined in §1630.1.1:

$$E = \rho\, E_h + E_v \qquad (30\text{-}1)$$

$$E_v = 0.5\, C_a\, I\, D \qquad \S 1630.1.1$$

Under §1632.2, the reliability/redundancy factor, ρ, may be taken equal to 1.0 for component design.

The 1997 UBC load factors do not distinguish between members of the lateral force-resisting system and components, as the 1994 UBC did. Therefore, wording in the 1997 code is such that E_v should be considered for strength design of components similar to the requirements for the structure design. E_v was added to the code to make the load factors consistent with the load combination 1.4 (D + L + E), which applied to lateral force-resisting systems. For component design, the normal ACI and AISC load factors were appropriate, and hence no inconsistency was created. The addition of E_v for component design creates a higher load factor on dead load when compared to the 1994 UBC requirements.

Application of load factors for typical bearing angle design.

$C_a = 0.493$

$I_p = 1.0$

$E_v = 0.5\ C_a\ I_p\ D = 0.25$ D

For steel design the equivalent load factor for dead load is 1.2 + 0.25 = 1.45.

For concrete design the equivalent load factor for dead load is 1.1(1.2 + 0.25) = 1.60.

Assuming this panel is located at Level 3, F_p (body) = 0.534(W_p); F_p (fastener) = 1.602(W_p)

Table 7-3. Connection 1: bearing support

Loading (1)	*Body Force*			*Fastener Force*		
	X-Direction	*Y-Direction*	*Z-Direction*	*X-Direction*	*Y-Direction*	*Z-Direction*
D	0.00	8.86	0.88	0.00	8.86	0.88
E_t	0.00	0.00	1.17	0.00	0.00	3.51
E_t	3.17	0.96	0.34	9.48	2.88	1.02
W_o	0.00	0.00	1.12	0.00	0.00	1.12
W_i	0.00	0.00	1.12	0.00	0.00	1.12
Concrete Load Combinations					*Anchor Factor =*	*1.3* (2)
1.4*D*				0.00	16.13	1.60
1.60*D* + 1.1E_t				0.00	18.33	6.84
0.99*D* - 1.1E_t				0.00	11.40	-3.89
1.60*D* + 1.1E_l				13.56	22.45	3.28
0.99*D* – 1.1E_l				-13.56	7.28	- 0.33
1.05*D* + 1.275W_o				0.00	12.09	3.06
0.9*D* – 1.3 W_i				0.00	10.37	-0.83
Steel Load Combinations						
1.4*D*	0.00	12.40	1.23	0.00	12.40	1.23
1.45*D* + 1.0E_t	0.00	12.82	2.44	0.00	12.82	4.78
0.9*D* - 1.0E_t	0.00	7.97	-0.38	0.00	7.97	-2.72
1.45*D* + 1.0E_l	3.16	13.78	1.61	9.48	15.70	2.29
0.9*D* – 1.0E_l	-3.16	7.01	0.45	-9.48	5.09	- 0.23
1.2*D* + 1.3W_o	0.00	10.63	2.51	0.00	10.63	2.51
0.9*D* – 1.3W_i	0.00	7.97	-0.66	0.00	7.97	-0.66

Notes:

1. *D* = dead load
   E_t = seismic out-of-plane
   E_l = seismic in-plane
   W_o = wind out
   W_i = wind in
2. From §1923.3, assuming special inspection.

6b. Typical connection design.

A typical bearing support is illustrated below and is used in this example to outline the design procedure for a panel connection. Most cladding panels use a threaded bolt to support the gravity loads. The bolt can be turned to adjust the panel into its final position. The embed is usually an angle with a threaded hole oriented as shown is Figure 7-7. This provides a low profile that can be hidden within the interior finishes.

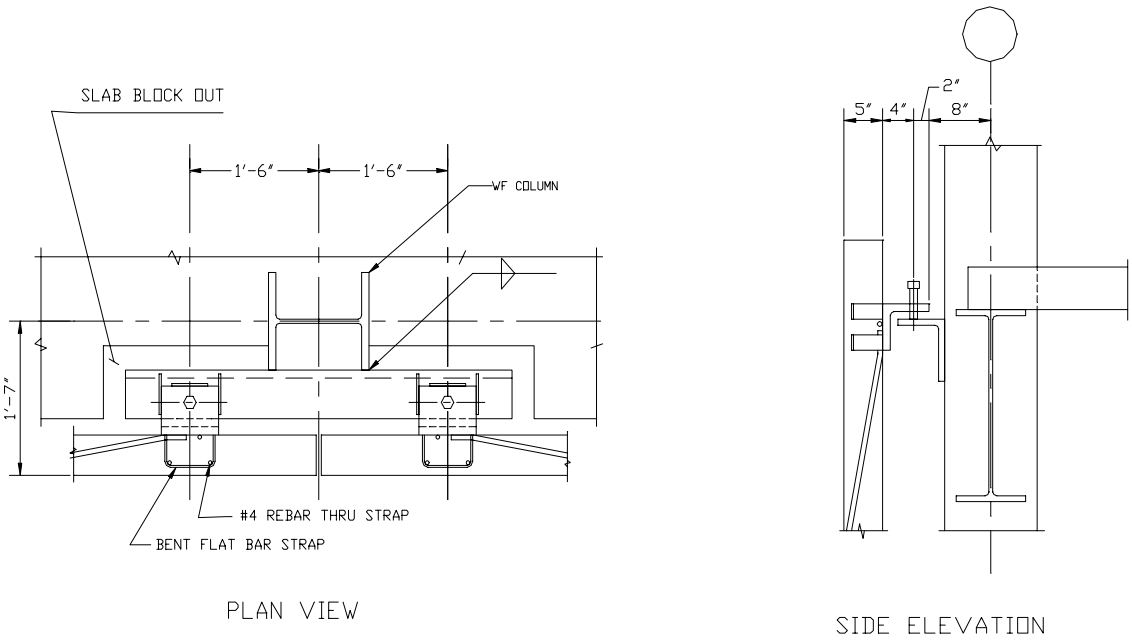

Figure 7-7. Typical bearing connection

Determine angle size using LRFD. **§2206**

Make preliminary selection of angle thickness. Note the critical section occurs at the root of the fillet or a distance k from the heel of the angle.

$$M_u = R_{vu}(e-k) = 13.78(4-1.5) = 34.45 \text{ k-in.}$$

Let width of angle b = 8 in.

$$t = \sqrt{\frac{4\,M_u}{\Phi\ f_y\, b}} = 0.73"$$

$\therefore$ Use $t = 1.0"$

Try $L6\times6\times1\times0'-8"$

The body of connection forces for the load combination of 1.45 D + 1.0 E_l are shown below. Note that the moment is determined at the k-distance (see p. 1-58 of AISC–LRFD Manual).

$M_{uy} = R_{y1}\,(e_1 - k)$ = 13.78 (4–1.5) = 34.45 k-in.

$M_{ux} = R_{x1}\,(e_2 - k)$ = 3.16 (6–1.5) = 14.22 k-in.

P_u = 1.61 k

$$\phi M_{ny} = \phi\ f_y Z_y = \frac{0.9(36\,\text{ksi})(8")(1)^2}{4} = 64.8\ \text{k-in.}$$

$$\phi M_{nx} = \phi\ f_y Z_x = \frac{0.9\,(36\,\text{ksi})(1")(8)^2}{4} = 518.4\ \text{k-in.}$$

$$\phi P_{nt} = \phi\ f_y A_t = 0.9\,(36\,\text{ksi})(8")(1") = 259.2\ \text{k}$$

$$\frac{1}{2}\frac{P_u}{\phi Pnt} + \frac{M_{ux}}{\phi M_{nx}} + \frac{M_{uy}}{\phi M_{ny}} = 0.56\ < 1.0 \quad \therefore \quad o.k.$$

Use $L6\times6\times1\times0'-8"$

6c. Anchorage to concrete. §1923

The concrete anchors consist of flat bar metal straps bent in a U-shape and welded to the back of the angle, as shown in Figures 7-8 and 7-9. Reinforcing bars are then placed in the inside corners of the bends to effectively transfer the anchor forces into the concrete. By doing this, the strength reduction factor, ϕ, may be taken as 0.85 instead of 0.65 per §1923.3.2.

Headed studs are also used to transfer the forces to the concrete. The pull-out calculation for design is similar to the procedure for bent straps.

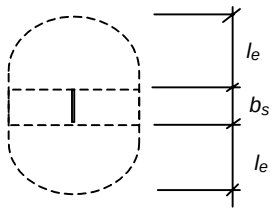

Figure 7-8. Single strap A_p

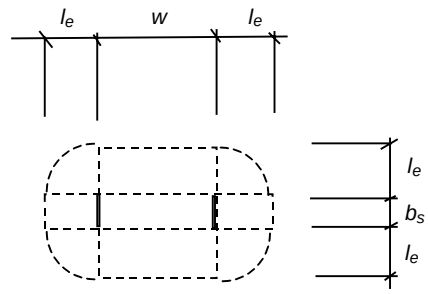

Figure 7-9. Double strap A_p

Single strap pull-out capacity. **§1923.3.2**

Find the pull-out capacity of one leg of a 2 in. x 5/16 in. flat bar using the projected area of the shear cone.

$b_s = 2$ in.

$t_s = 0.3125$ in.

$l_e = l - t_s = 4 - 0.3125 = 3.69$ in.

$$A_p = \left(2l_e b_s + \pi l_e^{\,2}\right) = 57.54\,\text{in.}^2$$

$$\phi P_{nc1} = \phi\lambda 4 A_p \sqrt{f_c'} = 0.85(1.0)(4)(57.54)\sqrt{4{,}000}\,/\,1{,}000 = 12.37\,\text{k}$$

Double leg strap pull-out capacity.

Find the pull-out capacity of both legs of the 2-inch x5/16-inch flat bar using the projected area of the shear cone.

Width $w = 8 - 2\,(1/2) - 0.3125 = 6.69$ in.

$$A_{p2} = \left(2l_e b_s + \pi l_e^{\,2} + 2l_e w\right) = 106.9\ \text{in.}$$

$$\phi P_{nc2} = \phi\lambda 4 A_p \sqrt{f_c'} = 0.85(1.0)(4)(106.9)\sqrt{4{,}000}\,/\,1{,}000 = 22.9\,\text{k} < 2\phi P_{c1} = 24.75$$

$\therefore\ \phi P_{c2}$ controls

Check pullout of bottom straps (double leg).

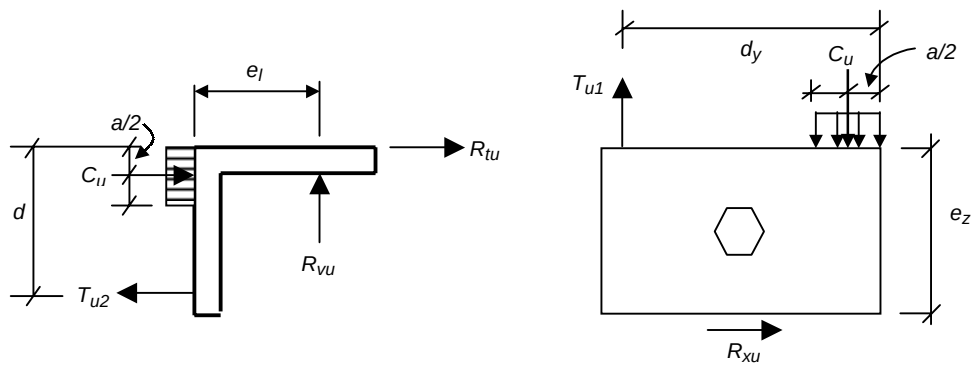

Figure 7-10. Forces on straps

$$a = \frac{\phi P_{nc}}{0.85 f_c' b} = \frac{22.9}{0.85(4)(8)} = 0.84 \text{ in.}$$

$$T_{u2} = \frac{(R_{vu})(e)}{(d - a/2)} = \frac{(22.45)(4)}{(5 - 0.84/2)} = 19.61 \text{ k} < \phi P_{nc2} \qquad o.k.$$

Check pullout of top straps (single leg).

$$T_{u1} = \frac{(R_{xu})(e_1)}{(d - a/2)} + \frac{R_{zu}}{2} - \frac{C_{u\min}}{2} = \frac{(13.56)(6)}{(7.34 - 0.5)} + \frac{(-0.33)}{2} - \frac{1}{2} \times \frac{(7.28)(4)}{(5 - 0.4)} = 8.56 \text{k} < \phi P_{c1} \quad \therefore \ o.k.$$

Use reinforcing steel to resist vertical and horizontal shear forces. Computations of required reinforcement is shown below.

$$A_{sv} = \frac{R_{yu}}{\phi f_y} = \frac{22.45}{(1.3)(0.9)(60 \text{ksi})} = 0.32 \text{ in.}^2$$

Use 2-#4 vertical bars welded to angle.

$$A_{sh} = \frac{R_{xu}}{\phi f_y} = \frac{13.56}{(1.3)(0.9)(60 \text{ksi})} = 0.19 \text{ in.}^2$$

Use 1-#5 horizontal bar welded to angle.

6d. **Weld design: plate to support.**

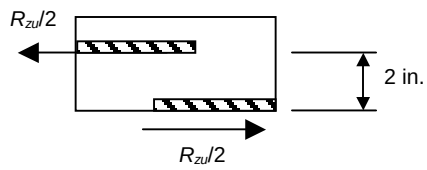

Figure 7-11. Typical weld

Out-of-plane forces.

Vertical load is supported by bearing (i.e. leveling) bolt.

R_{zu} = 4.78 k (factored steel load , fastener level)

Try a fillet weld 3 inches long.

$$f_v = \frac{1}{2}\frac{R_{zu}}{l_w} = \frac{1}{2}\frac{4.78}{3} = 0.80 \text{ k/in. shear component}$$

$$f_t = \frac{1}{2}\frac{R_{zu}e}{S_w} = \frac{1}{2}\frac{4.78(2/2)}{3^2/6} = 1.59 \text{ k/in. tension component}$$

$$f_r = \sqrt{f_x^{\,2} + f_t^{\,2}} = 1.78 \text{ k/in. resultant}$$

The weld capacity can be found in Table J2.5 [AISC-LRFD].

$$\phi R_{nw} = \phi t_{eff}\, 0.6F_{EXX} = 0.75(0.707)(0.25)(0.6)70 \text{ ksi} = 5.57 \text{ k/in.} > f_r \quad o.k.$$

Use ¼-inch fillet weld by 3 inches long on each plate.

Since the plate is designed for body loads, a plate of the same length and thickness will work.

Use plate 5/16 x 3 x 0 ft-5 in.

In-plane forces.

R_{xu} = 9.48 k (factored steel load, fastener level)

Try a fillet weld 4 inches long.

$$f_v = \frac{R_{xu}}{l_w} = \frac{9.48}{4} = 2.37 \text{ k/in.}$$

$$f_t = \frac{1}{2}\frac{R_{xu}e}{S_w} = \frac{1}{2}\frac{9.48(2)}{4^2/6} = 3.55 \text{ k/in.}$$

$$f_r = \sqrt{f_v^{\,2} + f_t^{\,2}} = 4.27 \text{ k/in.}$$

$$\phi R_{nw} = \phi t_{eff}\, 0.6 F_{EXX} = 0.75(0.707)(0.25)(0.6)70 \text{ ksi} = 5.57 \text{ k/in.} > f_r \quad o.k.$$

Use ¼-inch fillet weld by 4 inches long.

7. Drift analysis. §1633.2.4.2(1)

One of the most important aspects of cladding design is to ensure that the panel connections and joints allow for the interstory drift that occurs as a result of lateral deflection of the frame from wind, seismic loads, temperature, and shrinkage forces. For most structures in Seismic Zones 3 and 4, seismic drift will control.

For seismic drift, all cladding elements must accommodate the maximum inelastic story drift (Δ_M) that is expected for the design basis earthquake forces. The 1994 UBC estimated the inelastic drift as 3/8(R_w) times the calculated elastic story drift caused by design seismic forces. Now the inelastic drift is computed as 0.7 $R\Delta_S$ per §1630.9.2 or by a more detailed analysis. A comparison of the two values is shown below:

1994 UBC	**1997 UBC**
$\Delta_M = \frac{3}{8} R_w \Delta$	$\Delta_M = 0.7 R \Delta_s \approx 0.7\left(\frac{R_w}{1.4}\right) 1.4\Delta \approx 0.7 R_w \Delta$
If $T < 0.7$ sec, $\Delta \le \frac{0.04}{R_w} h$	If $T < 0.7$ sec
$\Delta_m = \frac{3}{8} R_w \frac{0.04h}{R_w} \le 0.015\ h$	$\Delta_M \le 0.025h$
If $T \ge 0.7$ sec, $\Delta \le \frac{0.03}{R_w} h$	If $T \ge 0.7$ sec
$\Delta_M = \frac{3}{8} R_w \frac{0.03h}{R_w} \le 0.01125h$	$\Delta_M \le 0.020h$

The maximum inelastic drift can be as much as 78 percent higher under the provisions of the 1997 UBC compared to that calculated under the 1994 UBC. This can have a major impact on the cladding elements and must be considered early in the planning process. Fortunately, the majority of structures have drift less than the maximum.

It is also important to coordinate the mechanism by which this drift is accommodated with other elements and components of the cladding system, such as the window system.

Drift requirements are: §1633.2.4.2 (1)

1. $2(\Delta_{wind})$
2. $\Delta_M = 3.2$ in.
3. $\Delta_{min} = 0.5$ in.

Infill panels, such as the column cover (Panel B), require special review when it comes to movement. Typical these panels are attached to other elements and see the full story drift, but the height over which this movement occurs is much less than the story height. Therefore, the rotation that the panel undergoes can be more than two times the rotation of the column.

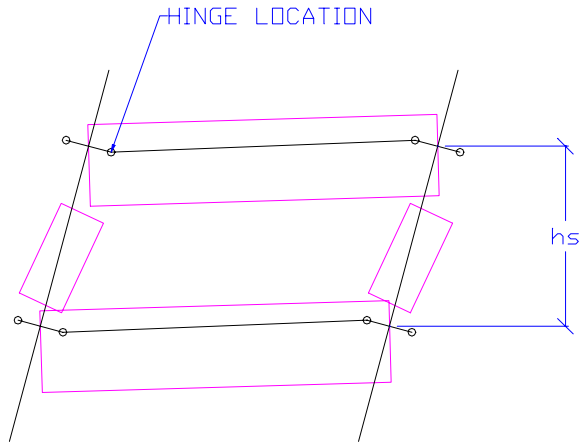

Figure 7-12. Cladding interaction with frame displacements

Consider the column cover in this case:

h_s = typical story height (ft)

$\phi = \Delta_M / h_c$ = 3.2"/(9')(12 in./ft) = 0.0296 radians

$\delta_v = \phi\,(w_c - a)$ = 0.0296 (48" – 12") = 1.06 in.

Since this is an estimate of the maximum movement, round the joint size to the nearest ¼-inch.

t_j = 1.25 in.

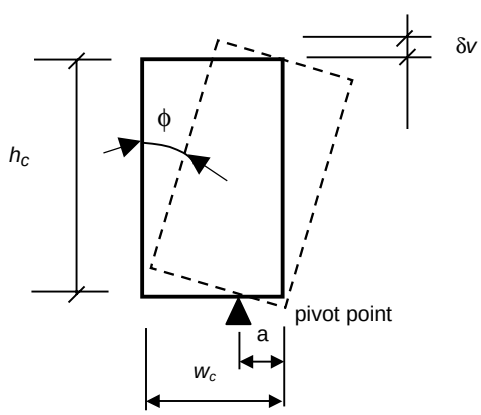

Figure 7-13. Rocker panel

As the beam hinge location moves toward the interior, the spandrel panel can also experience up and down movement at each support point.

$$\theta = \Delta_M / h_s = 3.2''/(16')(12') = 0.01667 \text{ radians}$$

$$\delta_v = \theta_x b = 0.01667 \text{ rad } (18'') = 0.30 \text{ in.}$$

Differential displacements out-of-plane of the panel should also be considered.

8. Typical details.

Figures 7-14 and 7-15 illustrate typical connection details.

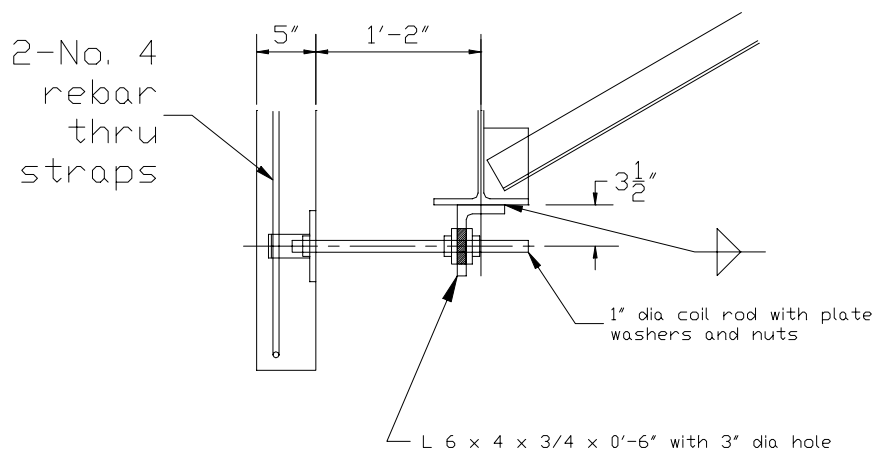

Figure 7-14. Tieback connection at bottom of cladding

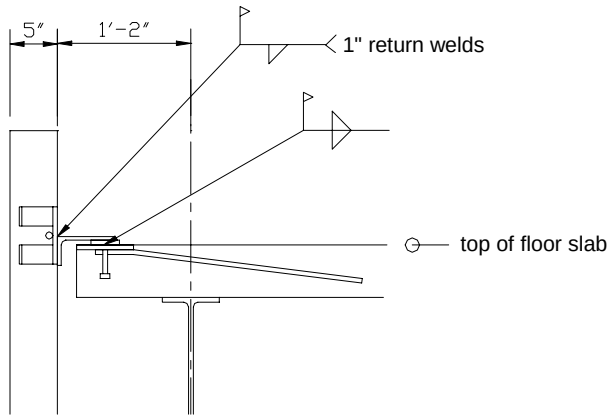

Figure 7-15. Bearing and shear connection at top of cladding

References

Iverson, James K. and Hawkins, Neil M., 1994. Performance of Precast/Prestressed Concrete Building Structures During Northridge Earthquake, PCI Journal, Vol. 39.

McCann, R.A., 1991. Architectural Precast Concrete Cladding Connections, Implementation and Performance of Structural Details, 1991 Fall Seminar, Session 2, Structural Engineers Association of Northern California.

PCI, 1999. PCI Design Handbook – Precast and Prestressed Concrete, 5th edition. Precast/Prestressed Concrete Institute, Chicago Illinois.

Sheppard, D. A. and Phillips, W. R., 1989. Plant Cast Precast and Prestressed Concrete: A Design Guide,3rd edition. McGraw-Hill, New York, New York.